uma racing

REVEAL TRUE PERFORMANCE.

PRODUCT CATALOGUE 2024

R SPEC S SPEC

■ TEAM'S CHOICE ■ RACE PROVEN ■ HIGH QUALITY ■ IN-HOUSE R&D

MOTORCYCLE PERFORMANCE PARTS
TECHNOLOGY BY UMA RACING

uma racing 武马

www.umaracing.com

uma
ウーマ

REVEAL TRUE PERFORMANCE.

PERFORMANCE ENGINE POWER PRATS

371358

POWERED BY uma racing

MOTORCYCLE PERFORMANCE PARTS

TECHNOLOGY BY UMA RACING

R SPEC

S SPEC

INTRODUCTION

POWERED BY uma racing

www.umaracing.com

UMA RACING

Established in 2002, **UMA Racing Sdn Bhd** began its journey in Malaysia under a joint venture between Meng Kah Auto Parts Trading Sdn Bhd and Maju Motor Racing as both parties had similar interests in providing high performance Motorcycle parts to the industry. With the iconic '**UMA Racing**' horse standing proud within our logo, 'HORSE POWER' has remained our main focus, pride and success.

Over the years, UMA Racing has developed many innovative and high-performance parts proven both on and off the racing circuit. With Japanese Chief Engineer, Yoshio Hirano at the helm, along with his team of technical engineers, have continuously carried out necessary research and development using state-of-the-art technology to further enhance the brand's products in meeting the consumers' ever-demanding high-performance expectations.

Being one of the main pioneers in our field, UMA Racing is widely recognized across the motorcycle industry as one of the top motorcycle performance parts manufacturer that specifically caters to those wish to **'REVEAL TRUE PERFORMANCE.'** of their machines. All of our products have gone through intensive hands-on engineering and testing on both Performance and Electronic parts to ensure that each product provides the best experience to any rider.

UMA Racing's uncompromised product quality is made from the finest materials for maximum durability. This is why UMA Racing stands out from its competitors. Tested and reviewed by professional riders all across the globe, UMA racing products has made its way into both Local and International Motorcycle Racing Championships.

Our outreach spans throughout the 4-corners of the world which includes; **Singapore, Indonesia, Thailand, Cambodia, Vietnam, Taiwan, Philippines, Myanmar, India, Japan, Korea, Australia, Bermuda (North America), Greece and France (Europe).** We shall continue to expand our passion through our products in igniting the true meaning of performance within the hearts of all Riders around the globe.

uma racing
TEAM & TECHNICAL SPONSOR
www.umaracing.com

OFFICIAL SPONSORS

MotoGP™

Team GRESINI RACING MotoGP

Moto2™

RW RACING GP

PERTAMINA MANDALIKA RACING TEAM INDONESIA SAG RACING TEAM

Team Moto2 QJMOTOR GRESINI RACING

Moto3™

SNIPERS

FIM ASIA ROAD RACING CHAMPIONSHIP

ASBK 1000 UB 150

PETRONAS CubPrix Malaysian Cub Prix Championship www.malaysiancubprix.com

CP150 CP125 WIRA

uma racing

TEAM & TECHNICAL SPONSOR

Team GRESINI RACING MotoGP

DIGGIA

49

Fabio Di Giannantonio

49

Fabio Di Giannantonio

Gresini Racing MotoGP™

MotoGP™

uma racing

TEAM & TECHNICAL SPONSOR

Team GRESINI RACING MotoGP

ALEX

73

Alex Marquez

Gresini Racing MotoGP™

73

Alex Marquez

MotoGP™

uma racing

TEAM & TECHNICAL SPONSOR

Team Moto2

QJMOTOR

GRESINI RACING

Jeremy
Alcoba
QJMOTOR
Gresini
Moto2™

Filip
Salac
QJMOTOR
Gresini
Moto2™

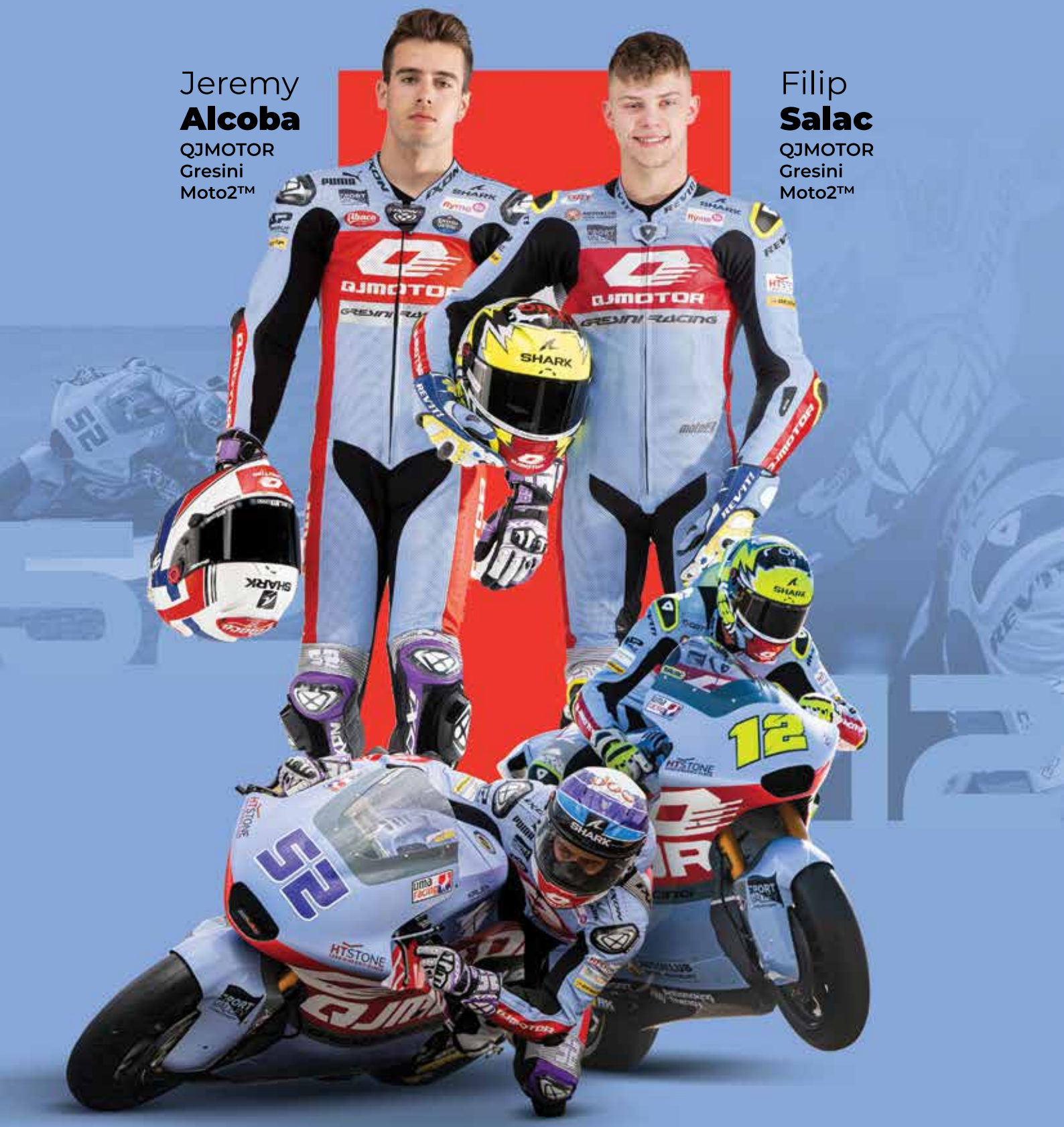

Moto2tm

uma racing
OFFICIAL SPONSOR
PERTAMINA
MANDALIKA RACING TEAM INDONESIA
SAG
Bo
Bendsneyder
Pertamina
Mandalika
SAG Team
Taiga
Hada
Pertamina
Mandalika
SAG Team
Moto2tm

uma racing
OFFICIAL SPONSOR

RW RACING GP

Zonta
Van Den Goorbergh
Fieten Olie Racing GP

Barry
Baltus
Fieten Olie Racing GP

Moto2tm

uma racing

OFFICIAL SPONSOR

SNIPERS

18

Matteo
Bertelle
Rivacold
Snipers Team

55

Romano
Fenati
Rivacold
Snipers Team

Moto3tm

uma racing

FIM ASIA ROAD RACING CHAMPIONSHIP

ASBK 1000 UB 150

UMA RACING
MAJU MOTOR

UMA RACING
YAMAHA PHILIPPINES

TEAM ONE
FOR ALL

IDEMITSU HONDA
YUZY RACING

LFN
H.PUTRA 969

uma racing

PETRONAS CubPrix
Malaysian Cub Prix Championship
www.malaysiancubprix.com

CP150 CP125 WIRA

PETRONAS YAMAHA MAJU MOTOR	IDEMITSU HONDA YUZY RACING	YAM RACING	KC RACING
27 RACING	AFB TECH RACING	AS25 ACADEMY	BOON SIEW HONDA
	HONG LEONG YAMAHA	CASTROL POWER 1 ULTIMATE HONDA RACING	

CONTENT

016 **RESEARCH & DEVELOPMENT**

018 **DISTRIBUTOR**

01

020 **LUBRICANTS & COOLANT**

022 FULL SYNTHETIC

022 SEMI SYNTHETIC

022 MINERAL

024 RADIATOR COOLANT

02

026 **ENGINE POWER PARTS**

028 SUPERHEAD

031 CYLINDER BLOCK

038 GASKETS

039 FORGED PISTONS

042 CONNECTING ROD

044 CRANKSHAFT

046 OIL PUMP

047 VALVE

048 VALVE SPRING

050 HIGH CAM

053 TIMING GEAR

03

055 **FUEL SYSTEM**

056 AIR FILTER KIT

059 THROTTLE BODY

062 FUEL PUMP

063 FUEL INJECTOR

064 AIR FILTER

065 AIR FUNNEL

066 CARBURETOR

071 INTAKE

CONTENT

UMA

RACING PRODUCT

04

073 COOLING SYSYEM

074 RADIATOR

05

076 TRANSMISSION

078 QUICKMISSION GEARBOX

080 CLUTCH

084 PULLEY ASSEMBLY

087 AUTO SPRING

06

088 EXHAUST

090 TRU PRESSURE EXHAUST

091 BACK PRESSURE EXHAUST

07

092 ELECTRONICS SYSTEM

094 M9 ECU

096 DIGITAL CDI

097 SPARK PLUG

099 QUICK SHIFTER

100 MAGNETO

101 PLUG COIL

102 OTHERS

08

103 OTHER PARTS & ACCESSORIES

104 QUICK THROTTLE

105 BYPASS

107 SPEEDOMETER

09

109 MOTORCYCLE MANUFACTURERS

pg.073 pg.076 COOLING SYSYEM TRANSMISSION

pg.088 pg.092 EXHAUST ELECTRONICS SYSTEM

pg.103 pg.109 OTHER PARTS & ACCESSORIES MOTORCYCLE MANUFACTURERS

THE POWER OF

RESEARCH & DEVELOPMENT

We firmly believe that outstanding research and development results in superior products.

UMA Racing invests a significant amount of time and effort in studying and creating highly advanced products, from concept to production.

We begin with innovative concepts and scrutinize every aspect of our projects, analysing, evaluating, and identifying as we go.

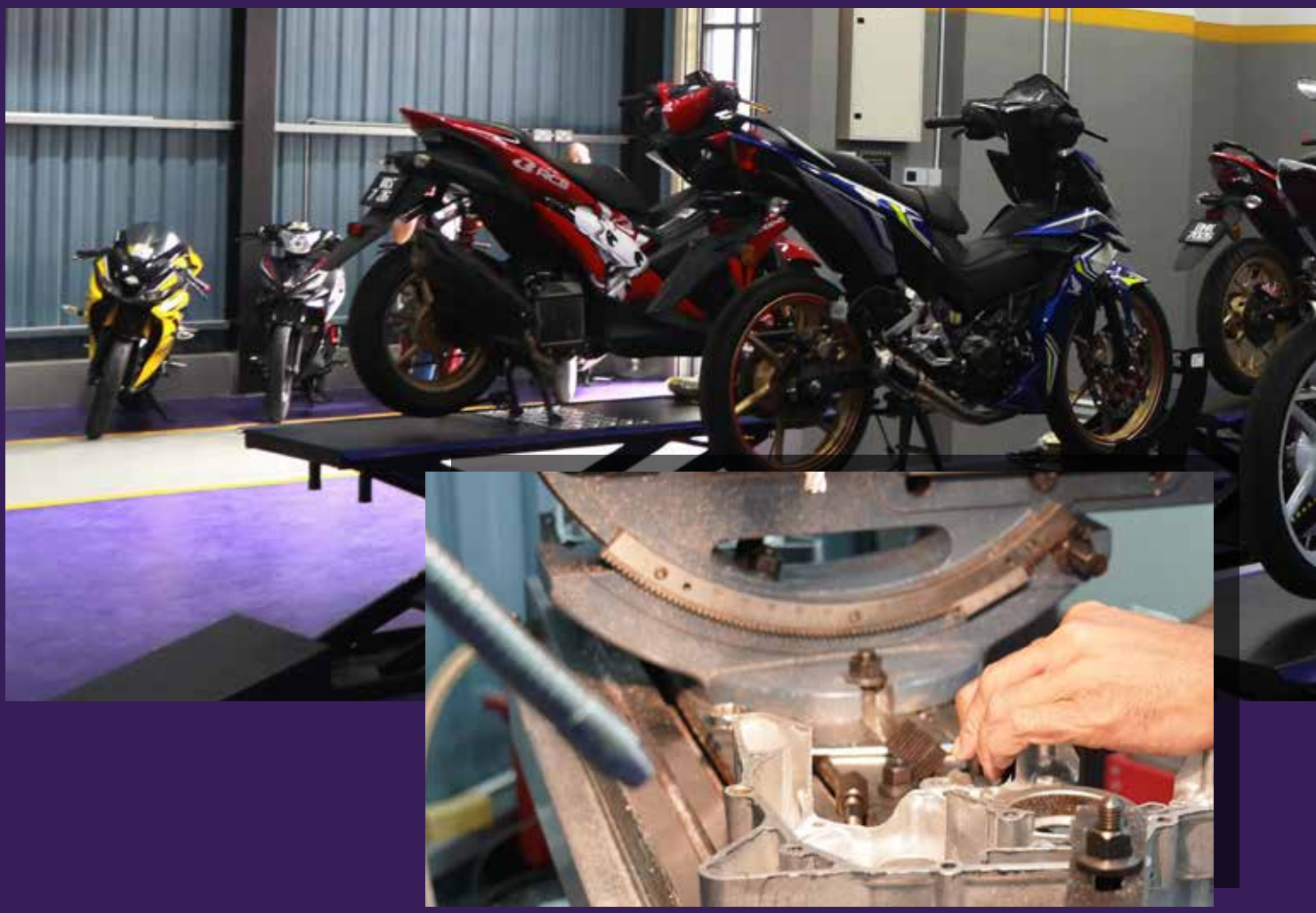

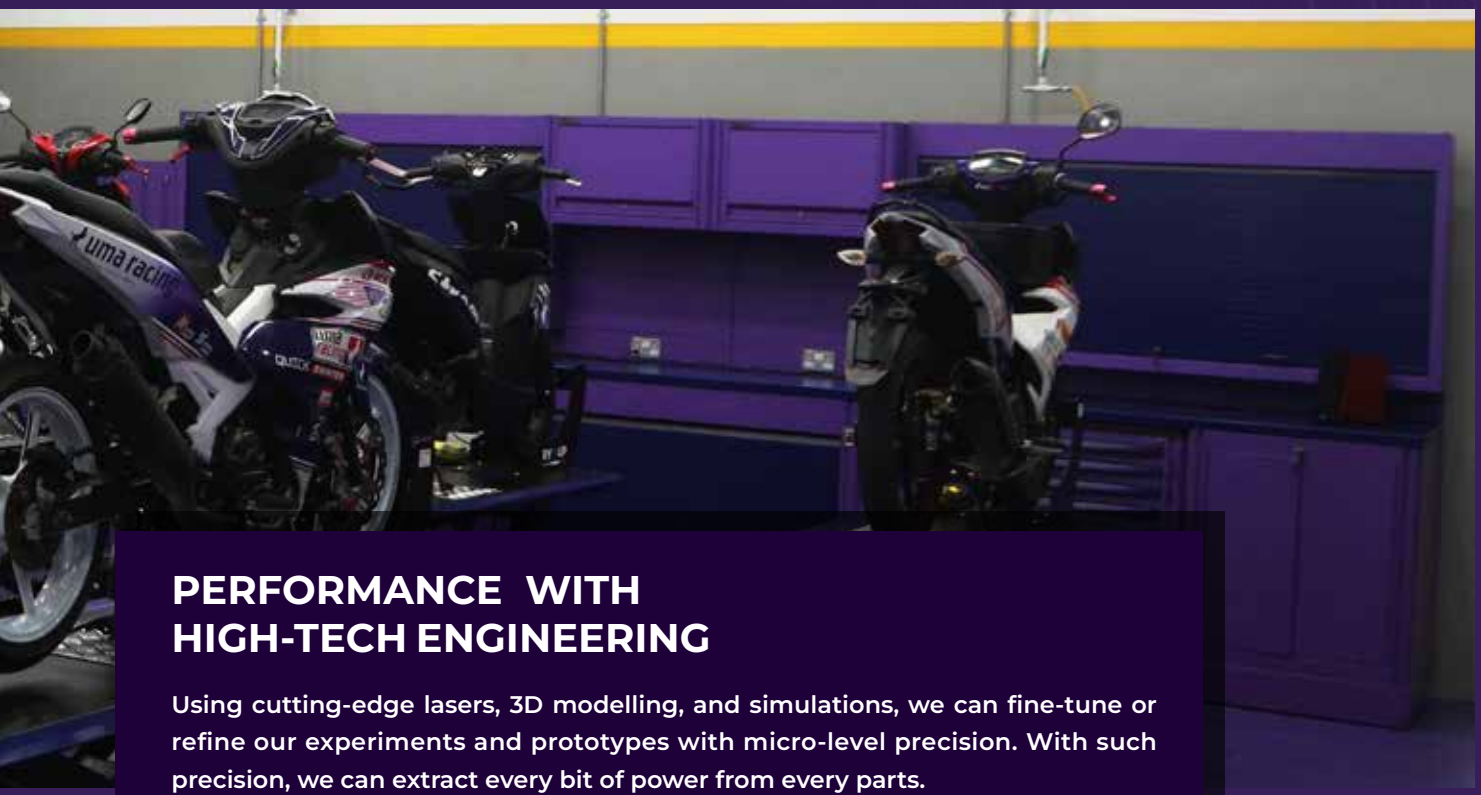

PERFORMANCE WITH HIGH-TECH ENGINEERING

Using cutting-edge lasers, 3D modelling, and simulations, we can fine-tune or refine our experiments and prototypes with micro-level precision. With such precision, we can extract every bit of power from every parts.

Yes, we do a lot of testing. At UMA Racing, viable prototypes are thoroughly tested, from hand-on installation to dyno and on-road testing. To maintain unrivalled quality and consistency, each production batch will be sampled and checked for accuracy.

BERMUDA

GREECE

FRANCE

UMA RACING DISTRIBUTOR

15 COUNTRIES IN THE WORLD

BUSINESS ASSOCIATES

From our headquarters in Malaysia, we have expanded our reach across the world. Our sales network spreads throughout Singapore, Thailand, Philippines, Vietnam, Cambodia, Myanmar, Bermuda, and also in Europe, Greece & France. Allowing us to meet any demands in terms of both design and production.

LUBRICANTS

Bring your engine to life! Specially formulated for optimum performance and phenomenal protection!

022 FULL SYNTHETIC

022 SEMI SYNTHETIC

022 MINERAL

COOLANT

Remember to maintain the proper coolant level and change it periodically. This simple step keeps your engines cool and ready to use, ensuring smooth journeys ahead.

024 RADIATOR COOLANT

REVEAL
THE TRUE
PERFORMANCE

uma racing
MOTORCYCLE ENGINE OIL
HP2000
SEMI SYNTHETIC
4T
SAE 10W
1 LITER (1.05 QUART)
REVEAL THE TRUE PERFORMANCE
uma racing
MOTORCYCLE ENGINE OIL
HP3000
FULL SYNTHETIC
4T
SAE 10W-30
API SN JASO MA2
1 LITER (1.05 QUART)
R SPEC
S SPEC
uma racing
REVEAL TRUE PERFORMANCE
uma racing
MOTORCYCLE ENGINE OIL
HP1000
MINERAL
4T
SAE 20W-40
uma racing

LUBRICANTS

- Prolongs engine life
- Formulated for any engine
- Keeps engine clean to maintain peak performance
- Low on maintenance with extra protection for engine components

FULL SYNTHETIC
HP3000

Code No.	Viscosity	Volume
02O00270	SAE 10W-50 MA2	1.2 Liter
02O00140	SAE 10W-30 MA2	1.0 Liter
02O00240	SAE 10W-40 MA2	1.0 Liter
02O00160	SAE 10W-50 MA2	1.0 Liter

SEMI SYNTHETIC
HP2000

Code No.	Viscosity	Volume
02O00280	SAE 10W-40 MA2	1.2 Liter
02O00180	SAE 10W-30 MA2	1.0 Liter
02O00200	SAE 10W-40 MA2	1.0 Liter
02O00210	SAE 15W-50 MA2	1.0 Liter

MINERAL ENGINE OIL
HP1000

Code No.	Viscosity	Volume
02O00250	SAE 20W-40 MA2	1.0 Liter

FULL SYNTHETIC
Scooter HP3000

Code No.	Viscosity	Volume
02O00230	5W-40 MB	1.0 Liter

SEMI SYNTHETIC
SCOOTER HP2000

Code No.	Viscosity	Volume
02O00220	10W-40 MB	1.0 Liter

uma racing
REVEAL TRUE PERFORMANCE.
S SPEC RADIATOR
COOLANT
READY TO USE
• Supreme thermoregulations
• Extended mileage protection
• Anti-rust protection
• Eco-friendly
• Tested by UMA RACING R&D
PREMIXED
DO NOT ADD WATER
For use with:
4-STROKE LIQUID COOLED MOTORCYCLE
1 LITRE
WARNING:
uma racing

RADIATOR COOLANT

- Supreme thermoregulations
- Extended mileage protection
- Anti-Rust protection
- 40:60 Pre-mixed
- Cooling performance for winning

PREMIX RADIATOR COOLANT (40:60)

Code No.	Volume
02O00260	1.0 Liter

ENGINE POWER PARTS

When it comes to modifying engine power parts, the UMA Racing system and engine design, along with proper tuning, balancing, and component compatibility, are highly regarded for achieving remarkable performance gains while maintaining reliability and longevity.

028 SUPERHEAD

031 CYLINDER BLOCK

038 GASKETS

039 FORGED PISTONS

042 CONNECTING ROD

044 **CRANKSHAFT**

046 OIL PUMP

047 VALVE

048 VALVE SPRING

049 HIGH CAM

053 TIMING GEAR

SUPERHEAD

SUPERHEAD
APPLE COMBUSTION CHAMBER

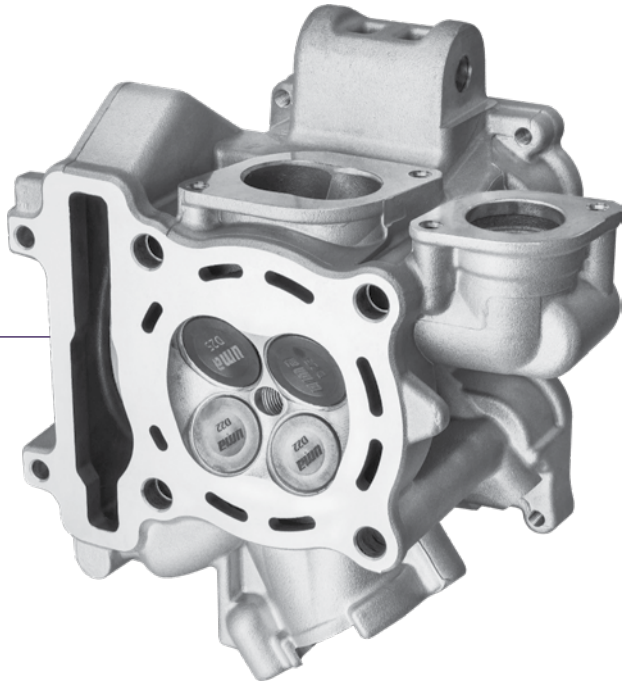

- Heat resistance at elevated temperature
- High strength & ductility aluminium
- Maximise air & fuel mixture ow
- Increase engine performance
- Oval shaped exhaust port

FULL KIT

Code No.	Model	Valve Size
02H00290	Y15ZR / EXCITER 150	IN 23 / EX 20
02H00300		IN 25 / EX 22

REPLACEMENT KIT (HEAD & VALVES ONLY)

Code No.	Model	Valve Size
02H00380	Y15ZR / EXCITER 150	IN 25 / EX 22

FEATURES:

Oval Shaped Port

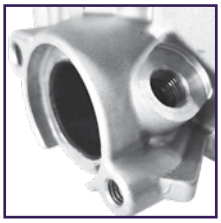

O2 Sensor Port

Apple Shaped Combustion Chamber

SUPERHEAD

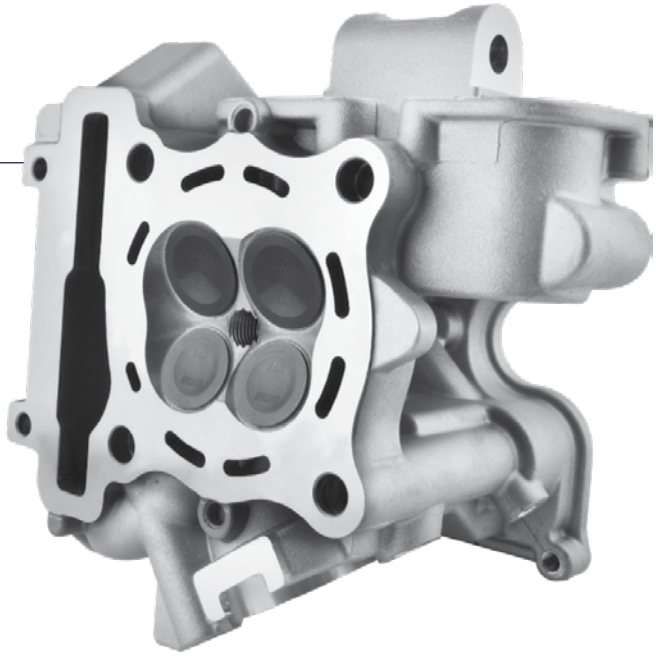

FULL KIT

Code No.	Model	Valve Size
02H00070	FZ 150i / LC4S / LC5S	IN 23 / EX 20
02H00180		IN 25 / EX 22

REPLACEMENT KIT (HEAD & VALVES ONLY)

Code No.	Model	Valve Size
02H00170	FZ 150i / LC4S / LC5S	IN 25 / EX 22

SUPERHEAD PARTS

VALVES

Valve neck and base made from stellite aluminum for strength and durability

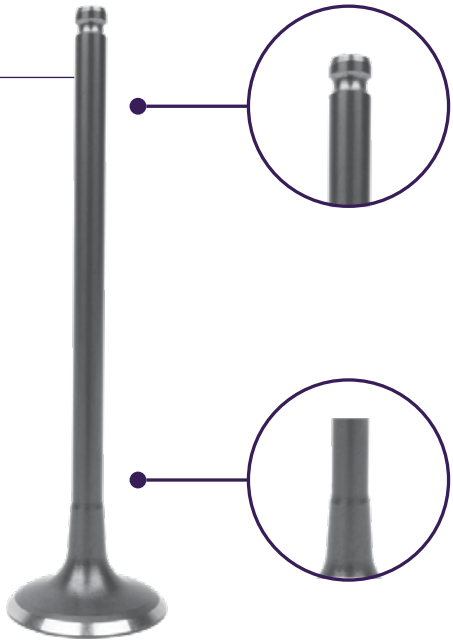

SUPERHEAD USE

Code No.	Model	Valve Size
02H00240	FZ150i / LC4S / LC5S / LCV8	IN 25 / EX 22
02H00100	FZ150i / LC4S / LC5S	IN 23 / EX 20
02H00390	Y15ZR / Y15ZR V2 / LC4S / LCV8	IN 25 / EX 22

VALVE SPRING K2

Code No.	Model
02VS0010	Y15ZR / EXCITER 150

ROCKER ARM

Code No.	Model	Valve Size
02H00090	FZ150i / LC4S / LC5S Y15ZR / LCV8	IN 25 / EX 22
02H00430	Y15ZR / LC4S / LCV8	IN 23 / EX 20

R1 HIGH CAM

TAPPET CLEARENCE:

0.08 mm - 0.10 mm exhaust
0.08 mm - 0.10 mm intake

Code No.	Model
02HC0010	FZ 150i / LC4S / LC5S

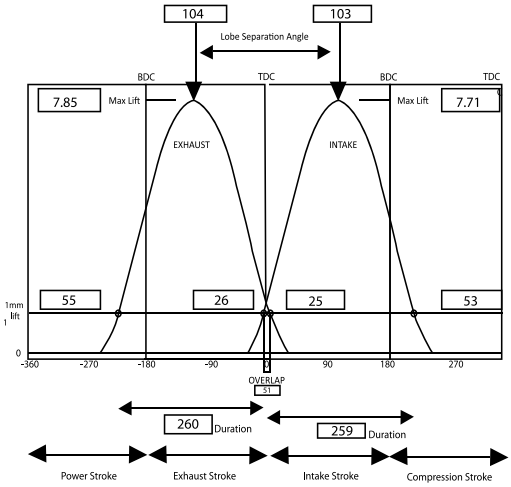

INTAKE

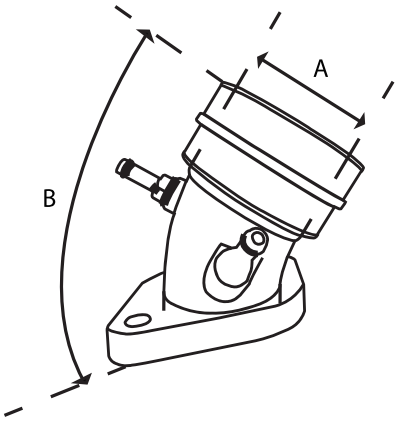

Code No.	Model	A	B
02I00140	FZ150i / LC4S / LC5S	28 mm	90°
02I00150	FZ150i / LC4S / LC5S	30 mm	90°
02I00160	FZ150i / LC4S / LC5S	32 mm	90°
02I00170	FZ150i / LC4S / LC5S	34 mm	90°

CERAMIC CYLINDER BLOCK

CYLINDER BLOCK

Cylinder block is the structure which contains the cylinder, plus any cylinder sleeves and coolant passages.

COMPOSITE CYLINDER BLOCK 63MM

- High pressure aluminum body
- Superior cooling performance
- Enhanced open water jacket
- Cast iron liner

ADV 150 / PCX 150 / VARIO 150 / Vario 125

RS150R / SUPRA GTR 150/ WINNER X 150 / RSX

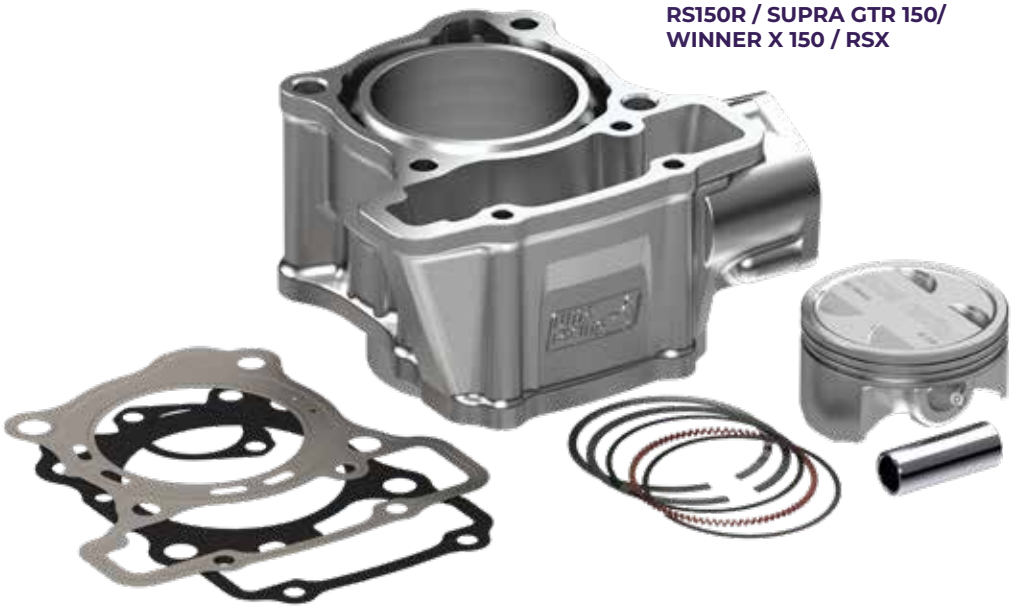

Code No.	Model	Cylinder Block Size	Total Height	Sleeve Length
02B00860	ADV 150 / PCX 150 / VARIO 150 / VARIO 125	63mm	91.3mm	22mm
02B00870	RS150R / SUPRA GTR 150/ WINNER X 150 / RSX	63mm	89.5mm	20mm

CERAMIC CYLINDER BLOCK

- Improve power performance and efficiency of engine.
- High pressure aluminum body with ceramic sleeve
- High strength at high temperature.
- Suitable for racing.

Y15ZR / Y15ZR V2 / LC 135

Y16ZR / NVX / NMAX / R15

94.5mm	Model	Cylinder Block Size	Total Height	Sleeve Length
02B00960	Y15ZR / Y15ZR V2 / LC 135	57mm	94.5mm	25mm
02B00970	Y16ZR / NVX / NMAX / R15	58mm	92.6mm	23mm

COMPOSITE CYLINDER BLOCK

- Cast iron liner
- Enhanced water jacket
- Superior cooling performance
- High pressure aluminium body

Code No.	Model	Size
02B00700	Y15ZR	63 mm

Code No.	Model	Size
02B00710	NMAX / R15 V3 / NVX / AEROX 155 / Y16ZR	63 mm

OPEN WATER JACKET CERAMIC CYLINDER BLOCK

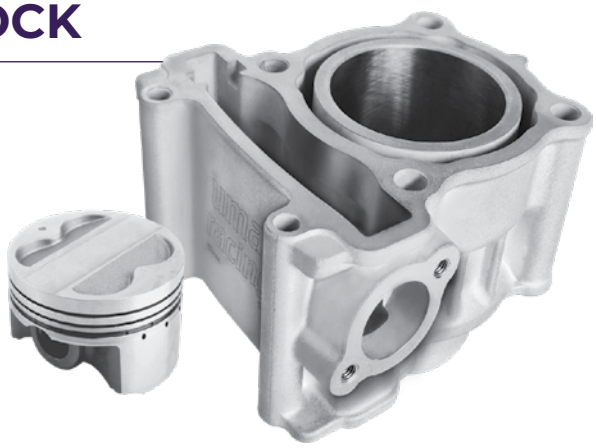

- Better tensile strength & durability
- Stable & reliable performance
- Tough wear-resistant surface
- Great increase in engine life
- Superior heat dissipation
- Enhanced water jacket

ENHANCE COOLING

Code No.	Model	Size
02B00520	Y15ZR / EXCITER 150	62 mm

XPRO CERAMIC CYLINDER BLOCK

- Extreme compression
- Reinforced structure
- Increased power
- Ultimate tuning

XPRO EXTREME COMPRESSION

Code No.	Model	Size
02B00550	Y15ZR / EXCITER 150 LC4S / FZ150i / LC5S	62 mm
02B00560		65 mm

CERAMIC CYLINDER BLOCK KIT

SUPERHEAD
APPLE COMBUSTION CHAMBER

- High performance engine enhancement
- Better tensile strength & durability
- Stable & reliable performance
- Tough wear-resistant surface
- Superior heat dissipation

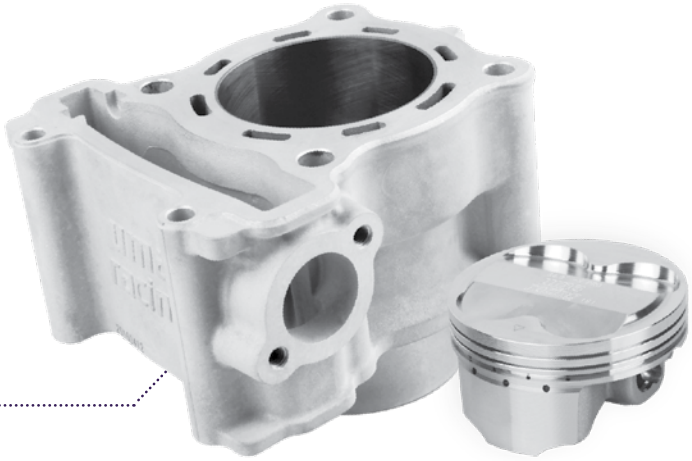

65MM
CERAMIC CYLINDER BLOCK KIT

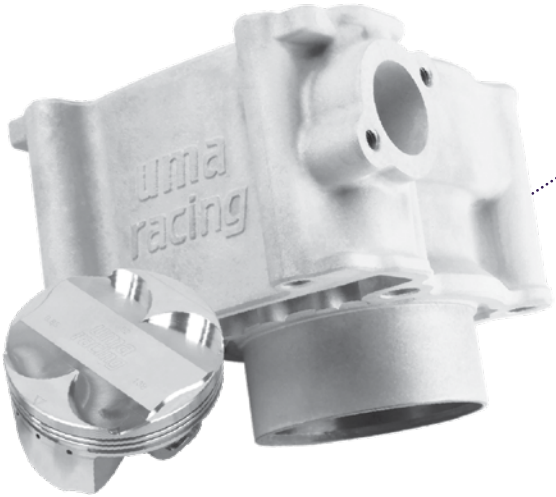

62MM
CERAMIC CYLINDER BLOCK KIT

Code No.	Model	Size
02B00630	Y15ZR / EXCITER 150	62 mm
02B00640		65 mm

LONG SLEEVED CERAMIC CYLINDER BLOCK

- Suitable for increased engine displacement
- Able to withstand extreme pressures
- Better tensile strength & durability
- Enhanced engine reinforcement
- Stable & reliable performance

Code No.	Model	Size
02B00600	Y15ZR / EXCITER 150	62 mm
02B00610		65 mm

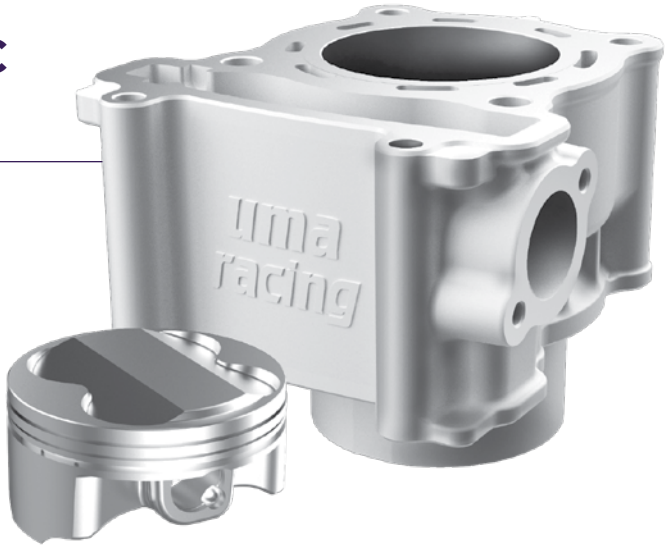

CERAMIC CYLINDER BLOCK

- High performance engine enhancement
- Better tensile strength & durability
- Stable & reliable in performance
- Tough wear-resistant surface
- Superior heat dissipation

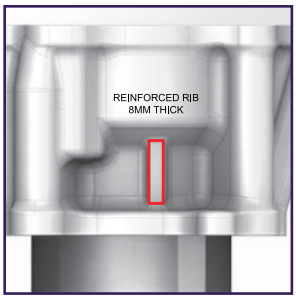

Reinforced rib

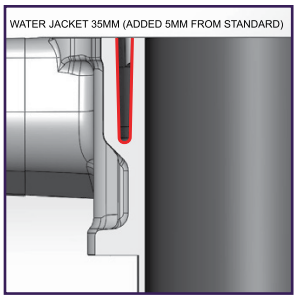

Enhanced water jacket

Code No.	Model	Size
02B00540	RS 150R / SONIC 150R RSX/WINNER X	62 mm

CERAMIC CYLINDER BLOCK WITH HEAD

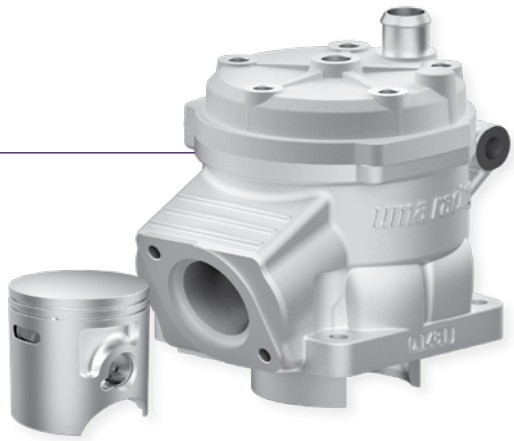

- High tensile strength & durability
- Increases horsepower & torque
- Tough wear-resistant surface
- Superior heat dissipation
- Displacement upgrade

Code No.	Model	Size
02B00730	KR150	65 mm

CERAMIC CYLINDER BLOCK

- High tensile strength & durability
- Stable & reliable performance
- Aluminium cylinder body
- Ceramic coated bore
- Piston kit included

Code No.	Model	Size
02B00240	LC 135	65 mm

CERAMIC CYLINDER BLOCK

- Ceramic coated for tough wear resistance
- High tensile strength & durability
- Increase horsepower & torque
- Stable & reliable performance

Code No.	Model	Size
02B00350	Y15ZR / EXCITER 150	62 mm
02B00360		65 mm
02B00370		57 mm (high compression)

- Ceramic coated for tough wear resistance
- High tensile strength & durability
- Stable & reliable performance
- Increase horsepower & torque

Code No.	Model	Size
02B00580	NMAX / R15 V3 / NVX / AEROX 155 / Y16ZR	63 mm
02B00590		63 mm (XPRO extreme compression)

- Ceramic coated for tough wear resistance
- High tensile strength & durability
- Increase horsepower & torque
- Stable & reliable performance
- Enhanced cooling

Code No.	Model	Size
02B00200	EX5 / EX5 DREAM	53 mm

- Cast iron liner
- Enhanced water jacket
- Superior cooling performance
- High pressure aluminium body

Code No.	Model	Size
02B00720	EX5	53 mm

GASKETS

ALUMINIUM CYLINDER GASKET

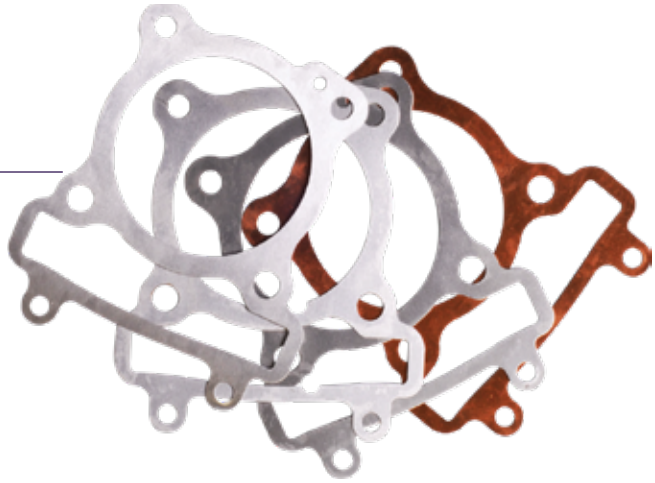

Code No.	Model	Thickness
02G00230	LC 135	0.2 mm
02G00240		0.3 mm
02G00250		0.4 mm
02G00260		0.5 mm

ALUMINIUM CYLINDER HEAD GASKET

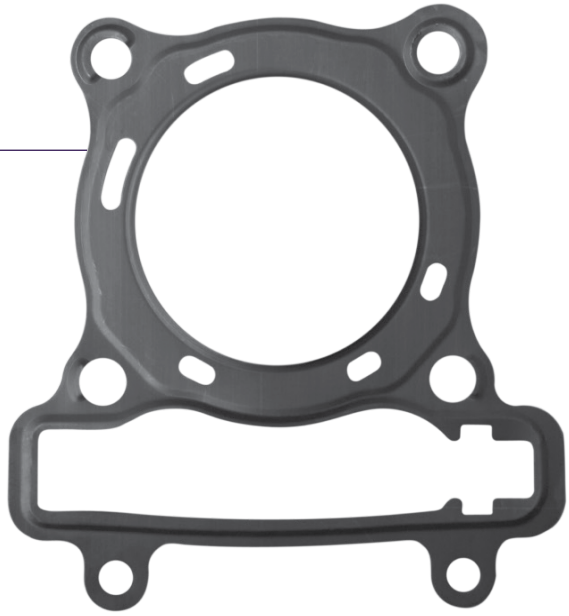

Code No.	Model
02G00010	LC 135

CYLINDER HEAD REPAIR GASKET

Code No.	Model	Top Size
02G00110	LC 135 / FZ150i	62 mm
02G00200		65 mm

ALUMINIUM BASE GASKET

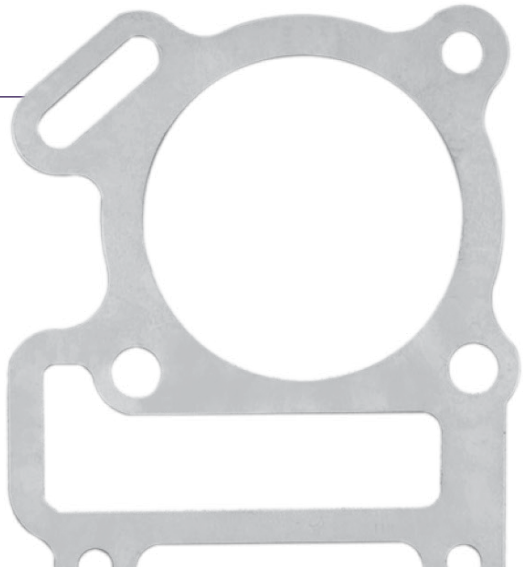

Code No.	Model	Thickness
02G00020	SRL 110	0.2 mm
02G00040	SRL 110	0.3 mm
02G00060	SRL 110	0.4 mm
02G00080	SRL 110	0.5 mm
02G00030	W110	0.2 mm
02G00050	W110	0.3 mm
02G00070	W110	0.4 mm
02G00090	W110	0.5 mm

FORGED PISTONS

FLAT PISTON

Piston is a moving disk enclosed in a cylinder which is made gas-tight by piston rings. A Flat Piston is a raw piston before machining.

- Better strength at high temperature
- High durability
- Lightweight

Code No.	Model	Size (mm)
NEW	HONDA BEAT	55
02F00550	VARIO 150 / ADV 150 / PCX 150 / RS150R	63
02F00560	NMAX / NVX 155	

RACING PISTON WITH RING

Code No.	Model	Size (mm)
02P00510	SRL	52 mm - R23 / 20V
02P00520		52 mm - R27 / 23V
02P00530		55 mm - R27 / 20V
02P00540		55 mm - R27 / 23V

Code No.	Model	Size (mm)
02P00120	EX5	51 mm
02P00130	SRL	52 mm - R
02P00140		52 mm
02P00150		52 mm - S
02P00160		53 mm
02P00170		54 mm - R
02P00180		55 mm - R23/20V
02P00190		55 mm - R27/23V

RACING FORGED PISTON WITH MACHINING

Code No.	Model	Size (mm)
02F00040	W110	51.25 mm
02F00060	W110	54.5 mm
02F00180	SRL110	52 mm
02F00200	SRL 110	55.25 mm
02F00230	LC 135	57 mm
02F00310	LC 135 (Superhead use)	57 mm
02F00100	LC 135	62 mm
02F00110	LC 135 (Standard Head)	62 mm
02F00120	LC 135 (Superhead use)	62 mm
02F00240	LC 135 (Standard Head)	65 mm
02F00250	LC 135 (Superhead use)	65 mm
02F00350	Y15ZR	57 mm
02F00450	LC 135 / Y15ZR (XPro)	65 mm
02F00440	Y125Z (Cast piston)	62 mm
02F00380	RS 150R	57.3 mm

RACING FORGED PISTON WITHOUT MACHINING

Code No.	Model	Size (mm)
02F00210	SRL 110	55.25 mm
02F00380	RS 150R	57.3 mm
02F00480	Y15ZR Flathead (clip & pin only)	57 mm
02F00490	YAMAHA / HONDA (unshaved)	53.4 mm

PISTON RING

Code No.	Model	Size (mm)
02P00080	LC 135	62 mm
02P00090	W110 / 115	51.25 mm
02P00100	W110 / 115	54.5 mm
02P00110	SRL	55 mm
02P00790	EX 5	53 mm
02P00800	W110	54 mm
02P00810	EGO	58.5 mm
02P00830	SRL (FG2)	55.25 mm
02P00840	SRL	52 mm
02P00850	Y15ZR / EXCITER 150	65 mm

DLC PISTON PIN

- Diamond Like Carbon coating
- Improve durability
- Abrasion resistant
- Low friction

Code No.	Model	Size (mm)
02PB0010	UNIVERSAL	14 x 41 mm
02PB0020		14 x 44 mm

PISTON PIN

Code No.	Model
02P00070	LC 135

CONNECTING ROD

Connecting rods are crucial for the proper functioning of internal combustion engines, and their design and material selection are critical factors in ensuring engine reliability and performance.

- Heavy duty
- Built to withstand high stress
- Surface treatment on bearing cage
- Reduce friction

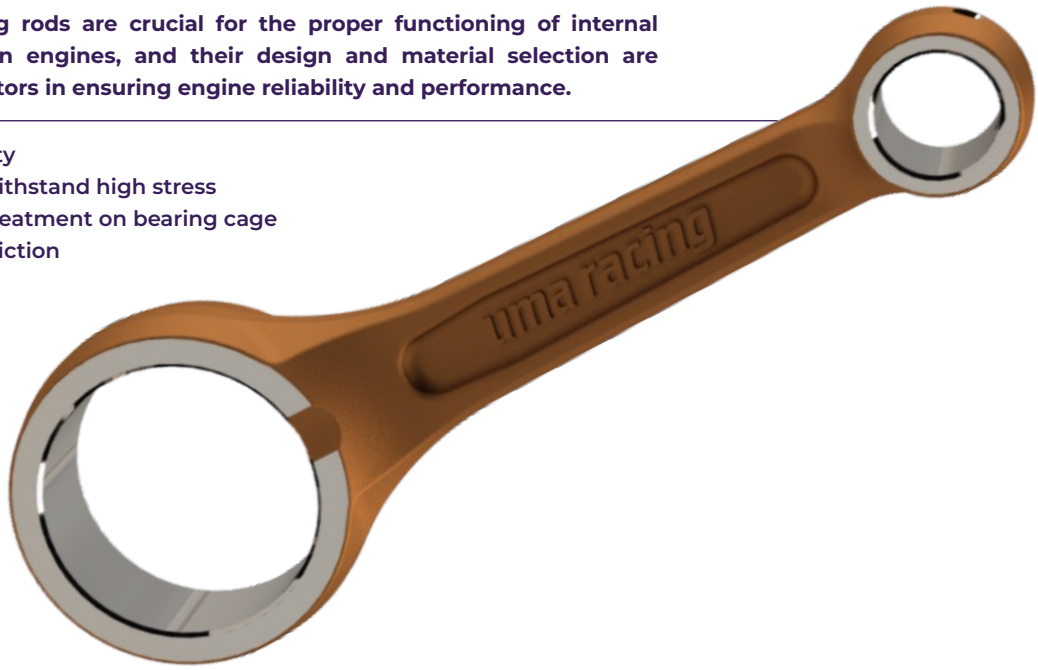

FULL KIT

Code No.	Model	Rod Size
02B00880	Y16ZR/R15-V3	99mm
02B00890	Y15ZR	103mm

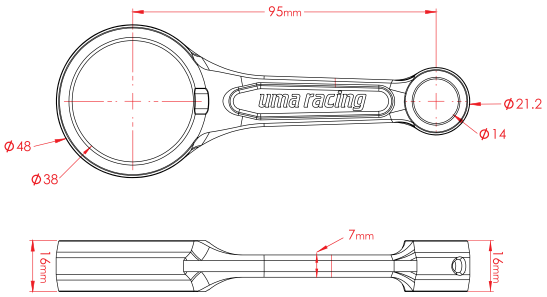

FULL KIT

Code No.	Model
02B00660	RS 150

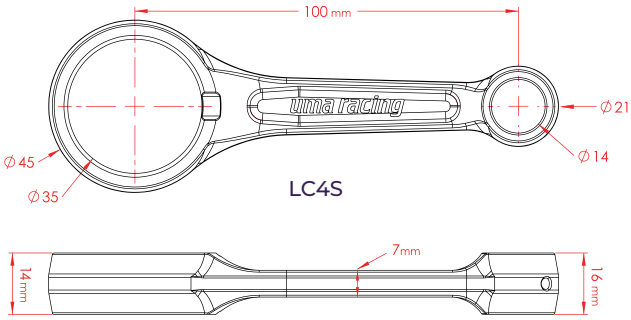

LC4S

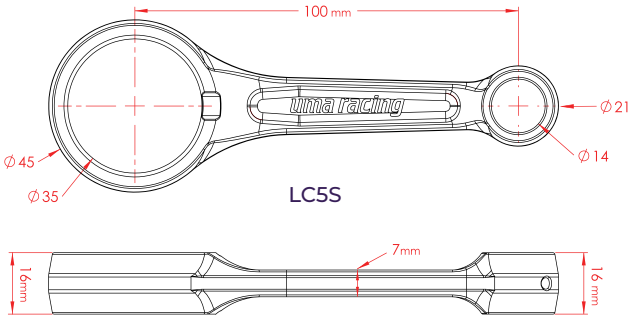

LC5S

FULL KIT

Code No.	Model
02B00410	LC4S
02B00450	Y15ZR / LC5S

SPARE BEARINGS

Code No.	Model
02B00490	LC4S
02B00500	Y15ZR / LC5S

CRANKSHAFT

- Improve power
- Extended stoke
- Greater low range torque
- Increased engine displacement

Code No.	Model	Size (mm)
02CS0010	Y15ZR	58.7 mm
02CS0020	Y15ZR	62 mm
02CS0030	Y15ZR	65.5 mm
02CS0040	RS 150R / RSX	61 mm

CRANKSHAFT DATA

Size	58.7 mm	61 mm	62 mm	65.5 mm
Stroke Total Offset	-	3.2 mm	3.3 mm	6.8 mm
Rod Length	100 mm	100 mm	104 mm	109 mm
Crank Pin Diameter	28 mm	26 mm	26 mm	26 mm
Main Bearing Diameter	25 mm	35 mm	25 mm	25 mm
Chain Link	96L	22L	98L	100L

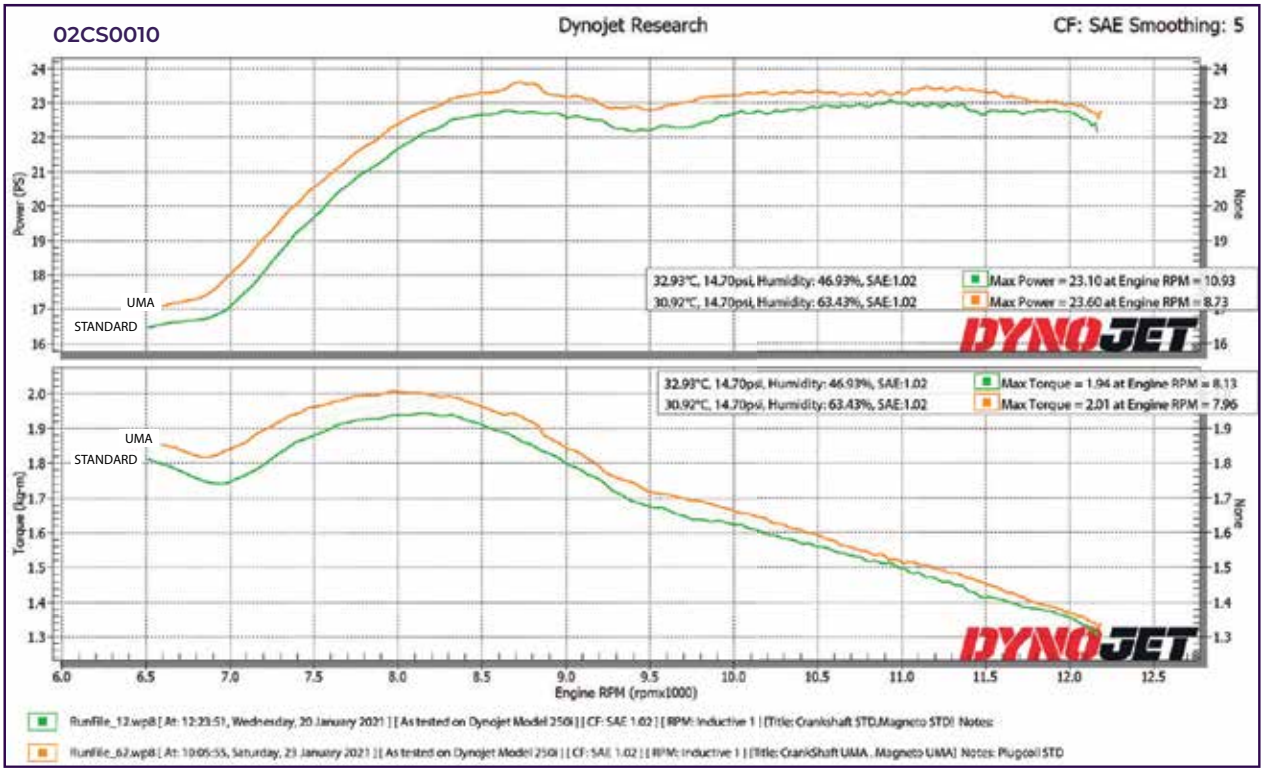

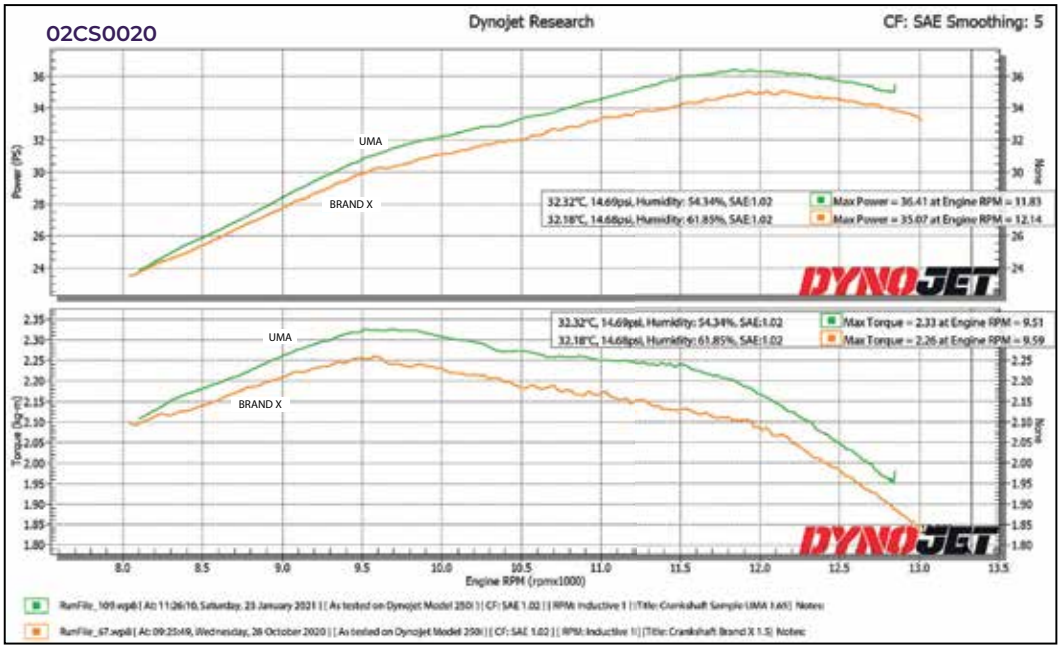
02CS0020
Dynojet Research
CF: SAE Smoothing: 5
UMA
BRAND X
32.32°C, 14.69psi, Humidity: 54.34%, SAE:1.02
32.18°C, 14.68psi, Humidity: 61.85%, SAE:1.02
Max Power = 36.41 at Engine RPM = 11.83
Max Power = 35.07 at Engine RPM = 12.14
Max Torque = 2.33 at Engine RPM = 9.51
Max Torque = 2.26 at Engine RPM = 9.59
Power (PS)
Torque (kg-m)
Engine RPM (rpmx1000)
DYNOJET

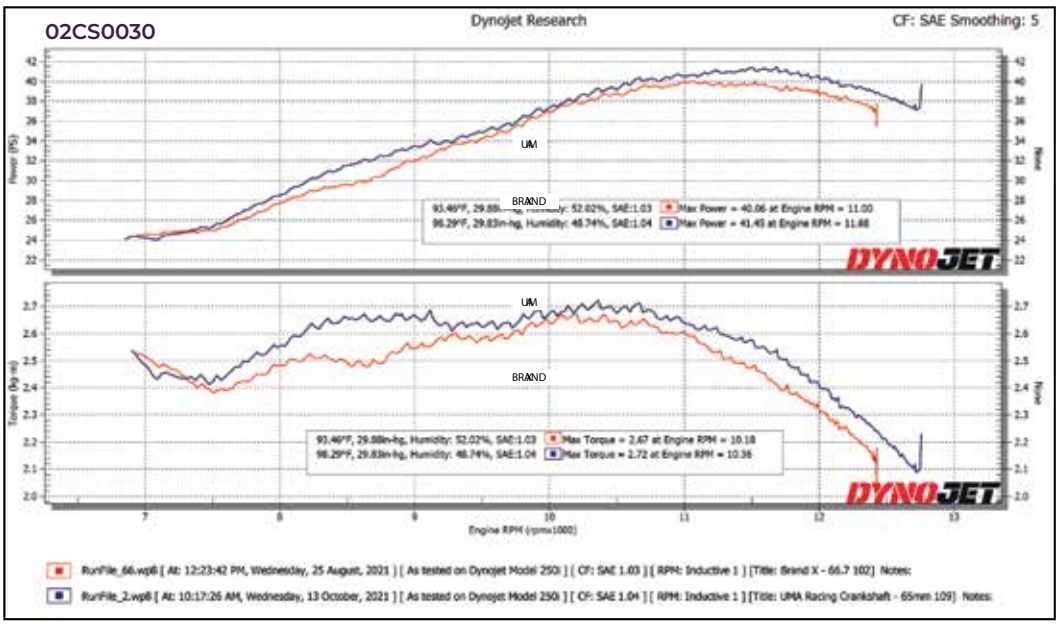
02CS0030
Dynojet Research
CF: SAE Smoothing: 5
UM
BRAND
93.46°F, 29.88in-hg, Humidity: 52.02%, SAE:1.03
96.29°F, 29.83in-hg, Humidity: 48.74%, SAE:1.04
Max Power = 40.06 at Engine RPM = 11.00
Max Power = 41.45 at Engine RPM = 11.66
Max Torque = 2.67 at Engine RPM = 10.18
Max Torque = 2.72 at Engine RPM = 10.36
Power (PS)
Torque (kg-m)
Engine RPM (rpmx1000)
DYNOJET
RunFile_66.wp8 [At: 12:23:42 PM, Wednesday, 25 August, 2021] [As tested on Dynojet Model 250i] [CF: SAE 1.03] [RPM: Inductive 1] [Title: Brand X - 66.7 102] Notes:
RunFile_2.wp8 [At: 10:17:26 AM, Wednesday, 13 October, 2021] [As tested on Dynojet Model 250i] [CF: SAE 1.04] [RPM: Inductive 1] [Title: UMA Racing Crankshaft - 65mm 109] Notes:

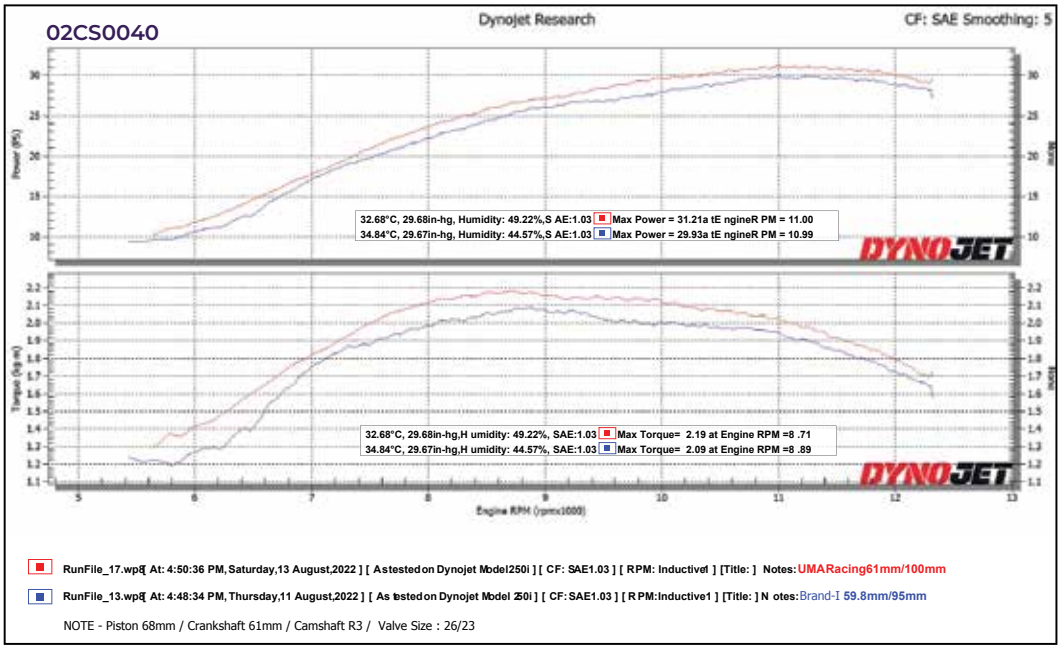
02CS0040
Dynojet Research
CF: SAE Smoothing: 5
32.68°C, 29.68in-hg, Humidity: 49.22%,S AE:1.03
34.84°C, 29.67in-hg, Humidity: 44.57%,S AE:1.03
Max Power = 31.21a tE ngineR PM = 11.00
Max Power = 29.93a tE ngineR PM = 10.99
32.68°C, 29.68in-hg,H umidity: 49.22%, SAE:1.03
34.84°C, 29.67in-hg,H umidity: 44.57%, SAE:1.03
Max Torque= 2.19 at Engine RPM =8 .71
Max Torque= 2.09 at Engine RPM =8 .89
Power (PS)
Torque (kg-m)
Engine RPM (rpmx1000)
DYNOJET
RunFile_17.wp8[At: 4:50:36 PM, Saturday,13 August,2022] [Astestedon Dynojet Model250i] [CF: SAE1.03] [RPM: Inductive1] [Title:] Notes: UMARacing61mm/100mm
RunFile_13.wp8[At: 4:48:34 PM, Thursday,11 August,2022] [As testedon Dynojet Model 250i] [CF: SAE1.03] [RPM:Inductive1] [Title:] N otes: Brand-I 59.8mm/95mm
NOTE - Piston 68mm / Crankshaft 61mm / Camshaft R3 / Valve Size : 26/23

OIL PUMP

- Greater flow rate
- High volume pump
- Superior performance
- High pressure for essential engine needs

Code No.	Model
02O00020	SRL 110

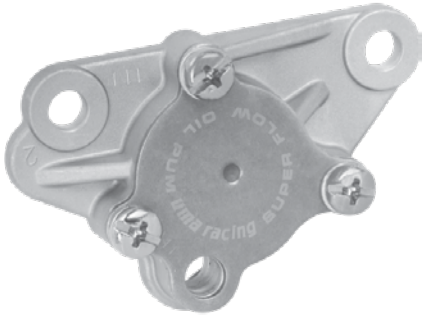

Code No.	Model
02O00030	EX5

Code No.	Model
02O00040	LC 135

Code No.	Model
02O00050	EGO

Code No.	Model
02O00080	LC5S

Code No.	Model
02O00110	RS150R

Code No.	Model
02O00100	Y15ZR
02O00120	Y15ZR (V2) / Y16ZR

DLC ROCKER ARM SHAFT

- Diamond Like Carbon coating
- Improve durability
- Abrasion resistant
- Low friction

Code No.	Model
02RS0001	Y15ZR / LC 135
02RS0002	RS 150R
02RS0003	NMAX / R15
02RS0004	VARIO 150 / PCX

VALVE

VALVES

Valve neck and base made from stellite aluminum for strength and durability

INTAKE & EXHAUST (SET)

Code No.	Model	Diameter (IN/EX)
02V00030	SRL	27/23
02V00040	SRL - V2	27/23
02V00050	SRL - V2	28/23
02V00060	SMASH PRO	27/23
02V00080	SMASH-PRO -V2	27/23
02V00090	KRISS	24/21
02V00100	SRL 110 - 5TN	23/20
02V00110	SRL 110 - 5TN	28/24
02V00310	LC 135	19/22
02V00390	RS 150R	24/21
02V00400	RS 150R	22/19
02V00440	NMAX	22/19
02V00480	DASH	26/21

INTAKE

Code No.	Model	Diameter (IN/EX)
02V00170	SRL / SRLZ	28
02V00180	SRL / SRLZ	29
02V00190	W110	27
02V00200	W110	28
02V00300	SRL	26

EXHAUST

Code No.	Model	Diameter (IN/EX)
02V00120	SRL / SRLZ	23
02V00130	SRL / SRLZ	24
02V00140	W110	23
02V00150	W110	24
02V00170	SRL / SRLZ	28

TITANIUM VALVE STEM BASE

Code No.	Model
02V00230	EX5

VALVE SPRING

VALVE SPRING K2

- Precision engineered from best materials
- Improved valve control
- Supports high cam lift
- Durable & reliable
- Stiffer spring rate

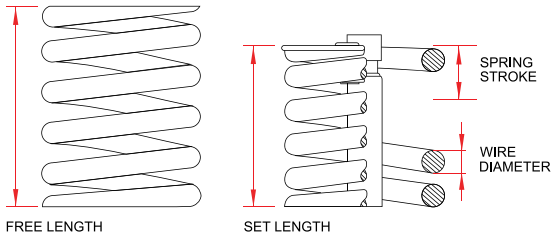

Code No.	Model	Wire Diameter	Free Length	Set Length	Spring Length
02V00320	BELANG	2.9 mm	38.5 mm	33.6 mm	8.5 mm
02V00410	LC 135 (K2)	3.0 mm	47.5 mm	36 mm	11 mm
02V00430	Y15ZR (K2)	3.2 mm	38.3 mm	32.3 mm	8.8 mm
02V00460	RS 150R (K2)	3.3 mm	38.4 mm	32.7 mm	9 mm
02V00500	VF3i	3.0 mm	40.2 mm	26.5 mm	10 mm

VALVE SPRING

Code No.	Model
02V00220	SRL
02V00490	HONDA / YAMAHA
02V00300	SRL

HIGH CAM

R1 CAMSHAFT

Contain of pointed cams in order to convert rotational motion to reciprocating motion. Used to operate the intake/exhaust valve to control combustion in closed chamber.

- Built for strength CNC machining from cast iron
- Increase Horse Power & Torque
- Extend valve timing
- Highly durable
- Higher camlift
- Low noise

Code No.	Model	Intake	Exhaust
NEW	Y16ZR	6.8 mm	6.4 mm

ROLLER ACTIVE CAM

WITH ROCKER ARM

Code No.	Model	Intake	Exhaust
02H00120	EX5 (Kit)	6.8 mm	6.4 mm

Model
BELANG

Model
EGO

Model
EX5

Model
SMASH PRO

Model
SRL

Model
W110

Model
DASH 125i

Model
SRL 115i

Model
DASH 110

Model
WAVE 125 KIT

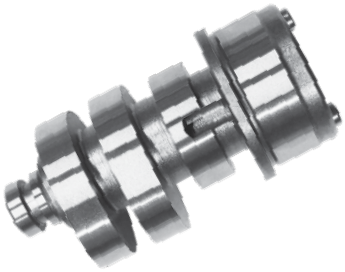

Model
NMAX

Model
LC 135 / Y15ZR / FZ 150i

Code No.	Model	Intake	Exhaust
02H00010	BELANG	7.4 mm	6.5 mm
02H00020	EGO	5.9 mm	5.9 mm
02H00030	EX5	6.8 mm	6.4 mm
02H00050	SMASH PRO	5.8 mm	5.5 mm
02H00060	SRL	5.9 mm	5.8 mm
02H00110	W110 (W/O rocker arm)	5.0 mm	4.5 mm
02H00140	MSX 125 / DASH 125i	5.04 mm	4.92 mm
02H00200	SRL 115i	4.6 mm	4.0 mm
02H00210	DASH 110	5.0 mm	4.5 mm
02H00270	BELANG R1	7.5 mm	7.3 mm
02H00310	WAVE 125 (240 Deg Kit)	7.25 mm	6.83 mm
02H00320	WAVE 125 (260 Deg Kit)	8.37 mm	7.9 mm
02H00330	NMAX	(L)6.22 (H)7.7	6.0 mm
02HC0010	LC 135 / Y15ZR / FZ150i (R1)	7.71 mm	7.85 mm
02HC0030	LC 135 / Y15ZR / FZ150i (R3)	8.64 mm	8.82 mm
02HC0040	LC 135 / Y15ZR / FZ150i (S1)	7.5 mm	7.52 mm
02HC0050	LC 135 / Y15ZR / FZ150i (R4)	9.6 mm	9.37 mm
02HC0060	LC 135 / Y15ZR / FZ150i (R5)	9.32 mm	9.26 mm
02HC0070	LC 135 / Y15ZR / FZ150i (R8)	9.42 mm	9.38 mm

CAM STOPPER

- Developed to withstand high RPM
- Made from stainless steel
- Outstanding durability
- Increased rigidity

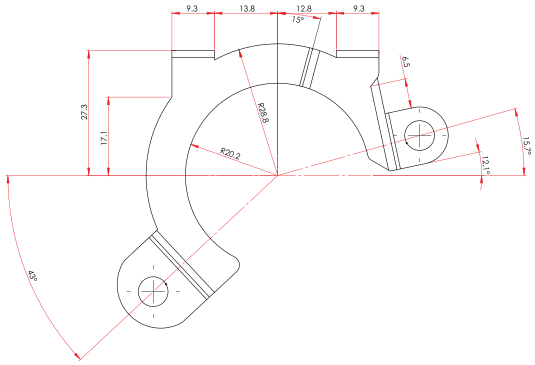

Code No.	Model
02H00340	LC 135 / FZ 150i / Y15ZR

TIMING CHAIN

- Corrosion resistance
- Increased wear resistance
- Improves chain & sprocket engagement

Code No.	Model	Length
02CH0008	HONDA EX5 F1 / DASH / WAVE 110	90L
02CH0009	HONDA WAVE 125i / W100 / EX5 DREAM / FUTURE 125	88L

SILENT CHAIN

- Minimal chain noise
- Smooth operation
- Supreme durability

Code No.	Model	Length
02CH0003	LC 135 / Y15ZR	96L
02CH0004	LC 135 / Y15ZR	98L
02CH0005	RS 150R	120L
02CH0006	RS 150R (3*4)	122L
02CH0007	SRL 115 / EGO / NOUVO S (2*3)	90L
02CH0010	R15 / Y16	96L

TIMING CHAIN GUIDE

- Made for use with UMA Racing crankshafts
- Guide rail for engine with increased stroke
- Reduce rattling and chain wear

Code No.	Model	Length
02T00710	Y15ZR	+ 6 mm (uma crankshaft 62 mm)

DEGREE WHEEL KIT

- Ensures precise alignment & centering of components in the crankshaft
- Calculates camshaft duration, valve lift & cam lobe centre
- Made from heavy gauge metal for long lasting use

Code No.
02I00190

TIMING GEAR

Component used to reduce the starting force required to start the engine.

Decompression Timing Gear

- Pressure reducing mechanism
- Smooth and easy engine start up
- Reduce strain on start system
- Comes with adjustable timing gear
- Made of high grade carbon steel material
- Unique to high CR engine

Code No.	Model	Total Outside Dia.	Total Height	Total teeth
02TG0010	Y15ZR / Y15ZR V2	74.8mm	14.8mm	38T
02TG0030	Y16ZR / R15 V3			
02TG0050	Y16ZR / MT15 V2			
02TG0060	NVX V1 / NMAX V1 / AEROX V1			
02TG0070	NVX V2 / NMAX V2 / AEROX V2			

TIMING GEAR

- Able to withstand higher load
- Redesigned for increase drigidity & stability
- Secured fitting

* Fine-tuning indicators to ensure precise adjustments to enhance efficiency and durability.

Code No.	Model
02T00630	SRL 115i

Code No.	Model
02T00010	EX5

Code No.	Model
02T00020	LC / FZ 150i

ADJUSTABLE TIMING GEAR

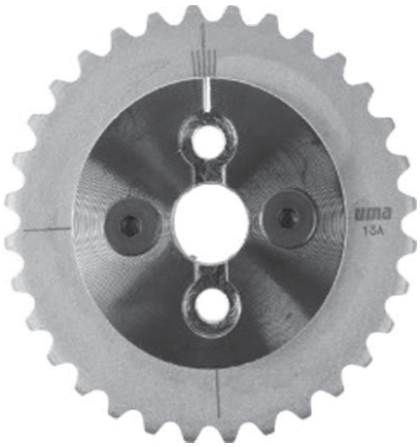

Code No.	Model
02T00040	W110

Code No.	Model
02T00030	SRL

Code No.	Model
02T00610	WAVE DASH

Code No.	Model
02T00650	BELANG

FUEL SYSTEM

The fuel system in a vehicle is responsible for storing, delivering, and supplying fuel to the engine for combustion. It plays a crucial role in the proper functioning and performance of the engine.

056 AIR FILTER KIT

059 THROTTLE BODY

062 FUEL PUMP

063 FUEL INJECTOR

064 AIR FILTER

065 AIR FUNNEL

066 CARBURETOR

071 INTAKE

AIR FILTER KIT

AIR FILTER DUAL KIT

- Dual-layered filters
- Bigger surface area
- Increase airflow
- Washable & replaceable filters

Code No.	Model
02A00170	Y16ZR / Y15ZR / EXCITER 150

Code No.	Model
02A00160	LC 135

Code No.	Model
02A00180	RS 150R / RSX

Code No.	Model
02A00190	NMAX

Code No.	Model
02A00210	FZ 150i

Code No.	Model
02A00220	BELANG

Code No.	Model
02A00270	R15v3 / MT15

AIR FILTER KIT

Help bring in more air, filter out all the unwanted particles in the air before it enters the engine and making the engine run better.

- Single layer filter
- Increase airflow
- PNP Replacement & Standard Design/Position
- Reduce restriction from the air box
- Bigger surface area

Code No.	Model
NEW	VARIO 160 / PCX 160 / ADV 160

Code No.	Model
02A00230	NVX

Code No.	Model
02A00200	EGO SOLARIZ / EGO AVANTIZ

Code No.	Model
02A00280	XMAX (INTAKE)

Code No.	Model
02A00240	PCX / VARIO

Code No.	Model
02A00310	NMAX 2020 / AEROX V2

Code No.	Model
02A00290	XMAX (Crankcase)

Code No.	Model
02A00300	SYM VF3I

Code No.	Model
02A00320	HONDA BEAT

REPLACEMENT SPONGE

Code No.	Model
02A00250	Y15ZR / Y16ZR

Code No.	Model
02A00260	RS150R

THROTTLE BODY

THROTTLE BODY KIT

- Clean & stylish
- Variable tuning options
- Dual injector for maximum performance
- Interchangeable intake manifold (long or short)

Code No.	Model	Size (mm)
02TB0017	NMAX V2 / NVX V2/ AEROX 155 V2	32 mm
02TB0018		34 mm

Code No.	Model	Size (mm)
02TB0015	VARIO 150	32 mm
02TB0016		34 mm

Code No.	Model	Size (mm)
02TB0013	Y16ZR / R15 v3	32 mm
02TB0014		34 mm

Code No.	Model	Size (mm)
02TB0007	RS150	32 mm
02TB0008		34 mm

Code No.	Model	Size (mm)
02TB0001	Y15ZR / EXCITER 150	32 mm
02TB0002		34 mm
02TB0003		36 mm
02TB0004		38 mm
02TB0005		40 mm
02TB0006		42 mm

INTAKE MANIFOLD ROUND (SHORT)

- Improves throttle response
- Compact structure
- Smoother air flow

Code No.	Model	Size (mm)
02IT0010	Y15ZR / EXCITER 150	32 mm
02IT0020		34 mm
02IT0030		36 mm
02IT0040		38 mm
02IT0050		40 mm
02IT0060		42 mm

INJECTOR PIPE HOLDER

- Improves injection consistency
- Easy installation
- Optimised fuel flow

Code No.
02IP0010

THROTTLE POSITION SENSOR (TPS)

- Higher resolution for ECU tuning
- High accuracy of TPS angle
- For modified throttle body
- Quicker response

Code No.	Model
02T00660	Y15ZR / FZ 150i / R15
02T00700	RS 150R / SONIC 150R
02TP0020	Y16ZR

FUEL PUMP

FUEL PUMP (4.0 BAR)

- Suitable for standard & big bore engines
- Consistent pressure for higher loads
- Maximise power output
- High flow capability

Code No.	Model
02F00530	Y16ZR / Y15ZR / EXCITER 150

FUEL INJECTOR

FUEL INJECTOR (4 HOLE)

- Consistent fuel delivery & distribution
- Precise fuel volume spray per minute (CC)
- Increase pressure for optimal combustion

Code No.	Model	Type
02AR0101	Y15ZR V2 / Y16ZR	160 cc
02AR0102		240 cc
02AR0103		320 cc

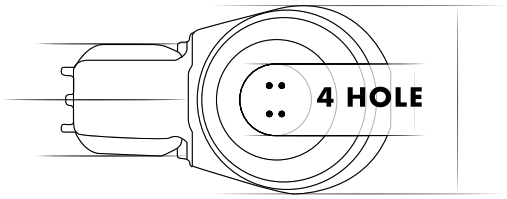

FUEL INJECTOR

Code No.	Model	Type
02F00150	FZ 150	140 cc
02F00160	FZ 150	160 cc
02F00260	Y15ZR V1	160 cc
02F00370	Y15ZR V1	240 cc
02F00460	Y15ZR V2	160 cc
02F00470	Y15ZR V2	240 cc
02AR0125	Y15ZR	280 CC

V1 to V2 INJECTOR HARNESS

Code No.
02AR0104

AIR FILTER

45⁰

Code No.	Size
02A00030	45 mm

90⁰

Code No.	Size
02A00060	38 mm
02A00070	45 mm

PRO - 1

Code No.	Size
02A00090	35 mm
02A00100	38 mm
02A00110	48 mm

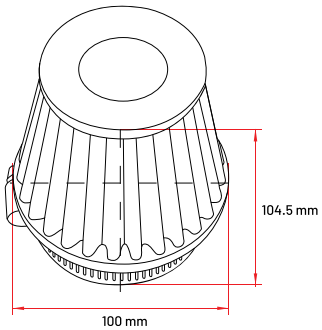

MAX FLOW

Code No.	Model	Size
02A00130	LC 135	50 mm
02A00140		55 mm

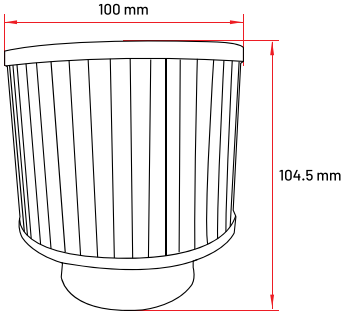

AIR FUNNEL

- Compatible with carburetor inlet
- Increased air volume
- Smoother air flow
- Improves power
- Plug & Play

BLUE

Code No.	Size
NEW	63 mm
NEW	60 mm
02AF0004	55 mm
02AF0001	50 mm

RED

Code No.	Size
NEW	63 mm
NEW	60 mm
02AF0005	55 mm
02AF0002	50 mm

55 mm

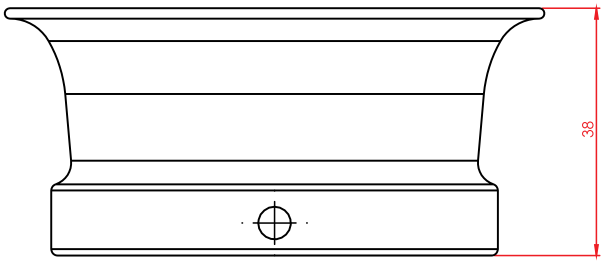

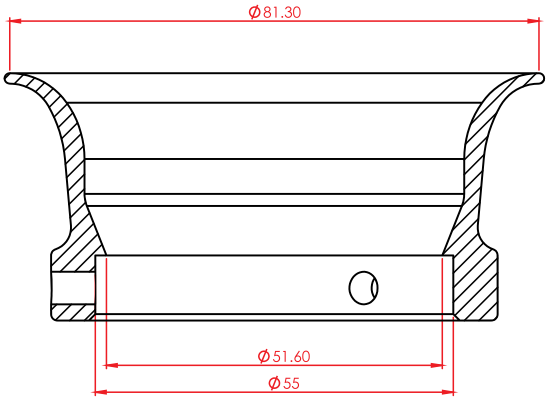

50 mm

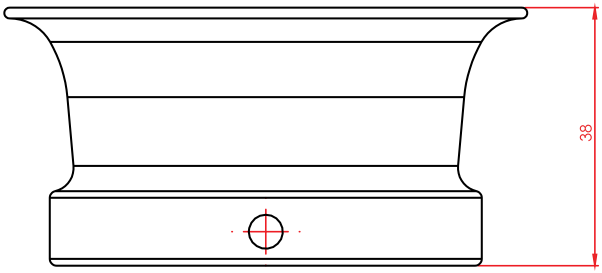

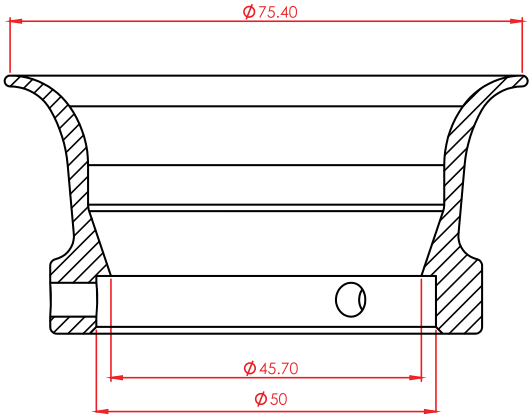

CARBURETOR

VR CARBURETOR

- Enhanced finishing
- High volume intake
- Ease of tuning
- Fuel efficient

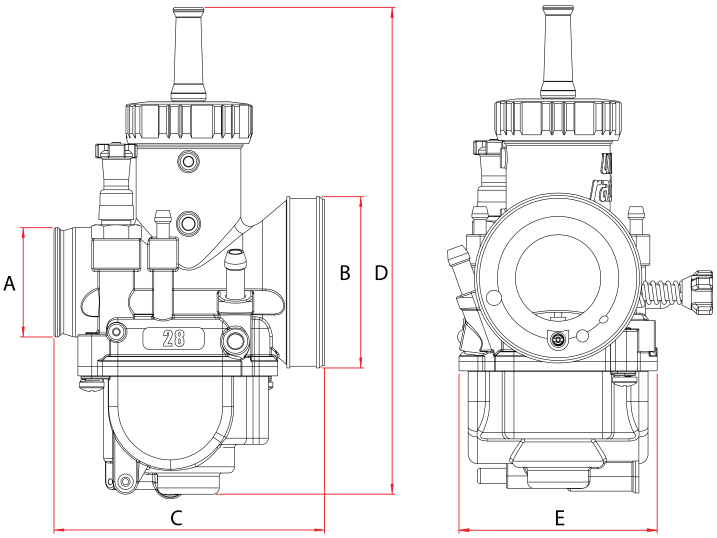

Code No.	Type	Size	A	B	C	D	E
02C01020	4T - Universal	28 mm	35	55	88	150.9	65

PWK CARBURETOR V2

- Consistent fuel delivery & distribution
- Flat-D slide for improved throttle response
- Increase pressure for optimal combustion

Code No.	Type	Size
02CA0010	4T - Universal	24 mm
02CA0020	4T - Universal	28 mm
02CA0030	4T - Universal	30 mm
02CA0040	4T - Universal	32 mm

PWK CARBURETOR V3

Code No.	Type	Size
02CA0110	4T - Universal	34 mm
02CA0120	4T - Universal	36 mm

CARBURETOR PARTS

No	Description	Code No.
1	**Float Valve**	02F00140
2	**Throttle Valve Set (3pcs)**	
	24 mm - (3.0 mm)	02T00340
	28 mm - (3.0 mm)	02T00350
	30 mm - (3.0 mm)	02T00360
	32 mm - (3.0 mm)	02T00370
	34 mm - (3.0 mm)	02T00380
	24 mm - (3.5 mm)	02T00170
	28 mm - (3.5 mm)	02T00180
	24 mm - (4.0 mm)	02T00190
	28 mm - (4.0 mm)	02T00200
	30 mm - (4.0 mm)	02T00210
	32 mm - (4.0 mm)	02T00220
	34 mm - (4.0 mm)	02T00230
	24 mm - (4.5 mm)	02T00240
	28 mm - (4.5 mm)	02T00250
	30 mm - (4.5 mm)	02T00260
	32 mm - (4.5 mm)	02T00270
	34 mm - (4.5 mm)	02T00280
	24 mm - (5.0 mm)	02T00290
	28 mm - (5.0 mm)	02T00300
	30 mm - (5.0 mm)	02T00310
	32 mm - (5.0 mm)	02T00320
	34 mm - (5.0 mm)	02T00330
3	**Replace oil Seal**	
	21 -28 mm	02O00010
	30 - 34 mm	02O00070
	Base 0 - Ring	02O00060
4	**Air Screw**	02A00120
5	**Idle Screw**	02I00120

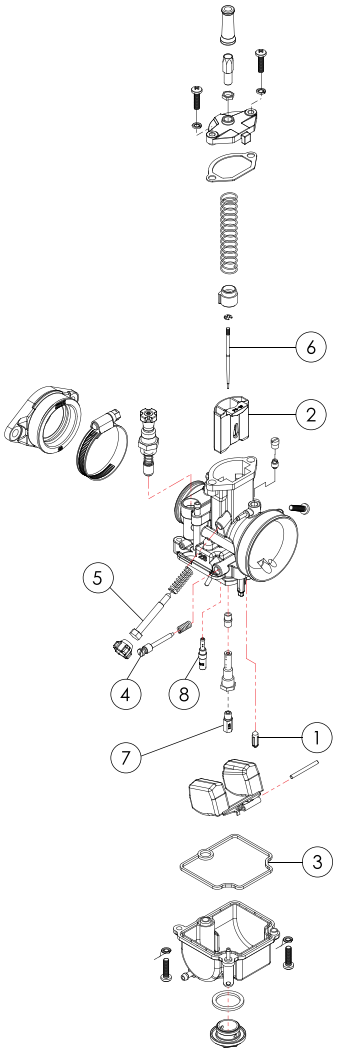

No	Description	Code No.
6	**Jet Needle**	
	N68E (2T)	02N00010
	N68J (4T)	02N00020
	N68K (4T)	02N00030
	N68L(4T)	02N00040
	N68M (4T)	02N00050
	N68N(4T)	02N00060
	VR 28 mm (4T)	02N00070
7	**Main Jet**	*refer next page
8	**Pilot Jet**	*refer next page

MAIN JET 5 PIECE KIT

Code No.	Size
02MJ2001	110-118
02MJ2002	120-128
02MJ2003	130-138
02MJ2004	140-148
02MJ2005	150-158
02MJ2006	160-168

MAIN JET 10 PIECE KIT

Code No.	Size
02M01020	88 - 110
02M01040	98 - 126

MAIN JET

Code No.	Size
02MJ1001	88
02MJ1002	90
02MJ1003	92
02MJ1004	94
02MJ1005	96

Code No.	Size
02MJ1006	98
02MJ1007	100
02MJ1008	102
02MJ1009	104
02MJ1010	106
02MJ1011	108
02MJ1012	110
02MJ1013	112
02MJ1014	114
02MJ1015	116
02MJ1016	118
02MJ1017	120
02MJ1018	122
02MJ1019	124
02MJ1020	126
02MJ1021	128

Code No.	Size
02MJ1022	130
02MJ1023	132
02MJ1024	134
02MJ1025	136
02MJ1026	138
02MJ1027	140
02MJ1028	142
02MJ1029	144
02MJ1030	146
02MJ1031	148
02MJ1032	150
02MJ1033	152
02MJ1034	154
02MJ1035	156
02MJ1036	158
02MJ1037	160

PILOT JET PIECES

Code No.	Size
02PJ1001	26
02PJ1002	28
02PJ1003	30
02PJ1004	32
02PJ1005	34
02PJ1006	36
02PJ1007	38
02PJ1008	40
02PJ1009	42
02PJ1010	48
02PJ1011	50
02PJ1012	52
02PJ1013	44
02PJ1014	46

PILOT JET 5 PIECE KIT

Code No.	Size
02PJ2001	30 - 38
02PJ2002	40 - 48

PILOT JET KIT

FOR LC135 STANDARD CARBURETOR ONLY

Code No.	Size
02P00650	15 - 25
02P00670	35 - 45

INTAKE

FUEL INJECTION INTAKE MANIFOLD

Code No.	Model	Size
02I00020	FZ 150i	19.5 - 32 Superhead use
02I00010	FZ 150i (Old)	32
02I00200	FZ 150i (New)	32
02I00180	FZ 150i (New)	34
02I00230	Y15ZR	32
02I00210	Y15ZR	28.5 - 32 Superhead use
02I00220	Y15ZR	32 - 34 Superhead use
02I00240	FZ 150i (New)	30 Superhead use
02I00250	FZ 150i (New)	34 Superhead use
02I00380	Y15ZR	31 - 36 Superhead use

CARBURETOR INTAKE MANIFOLD

Code No.	Model	Size
02I00060	LC 135	28 mm
02I00070	LC 135	30 mm
02I00080	SRL	24 mm
02I00090	SRL	28 mm
02I00100	UNIVERSAL	24 mm
02I00110	UNIVERSAL	28 mm

INTAKE ADAPTOR

Code No.	Size
02I00030	24 mm
02I00040	28 mm
02I00050	30 / 32 mm

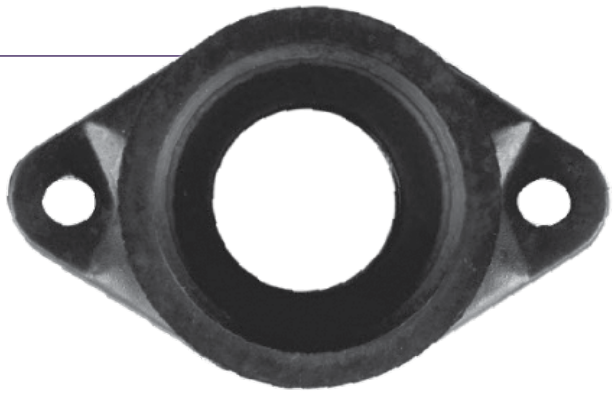

CARBURETOR FLANGE

Code No.	Size
02C00360	35 - 38 mm
02C00370	38 - 40 mm

CONNECTION TUBE

Code No.	Model	Size
02C00120	FZ 150i	32 mm
02C00880	FZ 150i	34 mm
02C00930	Y15ZR	34 mm

COOLING SYSTEM

The radiator is a critical component of a vehicle's cooling system. Its main function is to dissipate the excess heat generated by the engine during combustion.

074 RADIATOR

RADIATOR

- Made from high grade aluminium
- Superior cooling capability
- Thicker & wider core
- Quick heat disbursement
- Applicable for big bore engine
- Increased capacity

COOLING INCREASE :
10%

VOLUME CAPACITY :
280 ml

SIZE
170mm (L) X 190mm (H) X 30mm (W)

Code No.	Model
02R00090	YAMAHA NMAX V2 / NVX V2 / AEROX 155 V2

COOLING INCREASE :
10%

VOLUME CAPACITY :
290 ml

SIZE
220mm (L) X 166mm (H) X 26mm (W)

Code No.	Model
02R00080	Y16ZR / SNIPER 155 / EXCITER 155

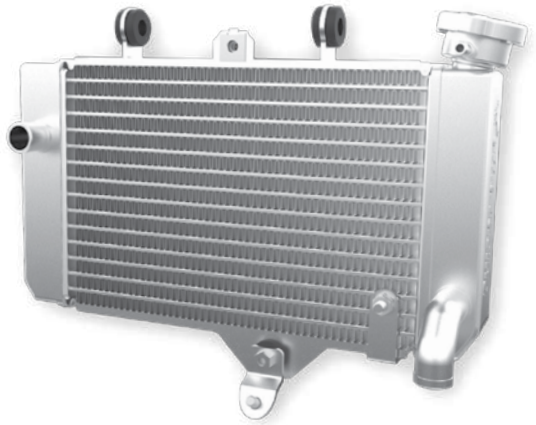

COOLING INCREASE :
30%

VOLUME CAPACITY :
350 ml

SIZE
295mm(L) x 154mm(H) x 26mm (W)

Code No.	Model
02R00060	RS 150R / SONIC 150R / RSX

COOLING INCREASE :
40%

VOLUME CAPACITY :
350 ml

SIZE
305mm(L) x 154mm(H) x 26mm(W)

Code No.	Model
02R00050	Y15ZR / EXCITER 150

COOLING INCREASE :
40%

VOLUME CAPACITY :
380 ml

SIZE
305mm(L) x 154mm(H) x 26mm(W)

Code No.	Model
02R00070	LC 135 / LCV8

TRANSMISSION

The transmission, often called the gearbox, plays a crucial role in vehicles with internal combustion engines. Its primary purpose is to transfer power from the engine to the wheels, enabling smooth movement at different speeds and under diverse driving conditions.

078 QUICKMISSION GEARBOX

080 CLUTCH

084 PULLEY ASSEMBLY

087 AUTO SPRING

QUICKMISSION GEARBOX

QUICKMISSION GEARBOX

- Greater flow rate
- High volume pump
- Superior performance
- High pressure for essential engine needs

*WITHOUT DRIVE AXLE

Code No.	Model
02GB0100	Y15ZR / FZ150i / LC5S

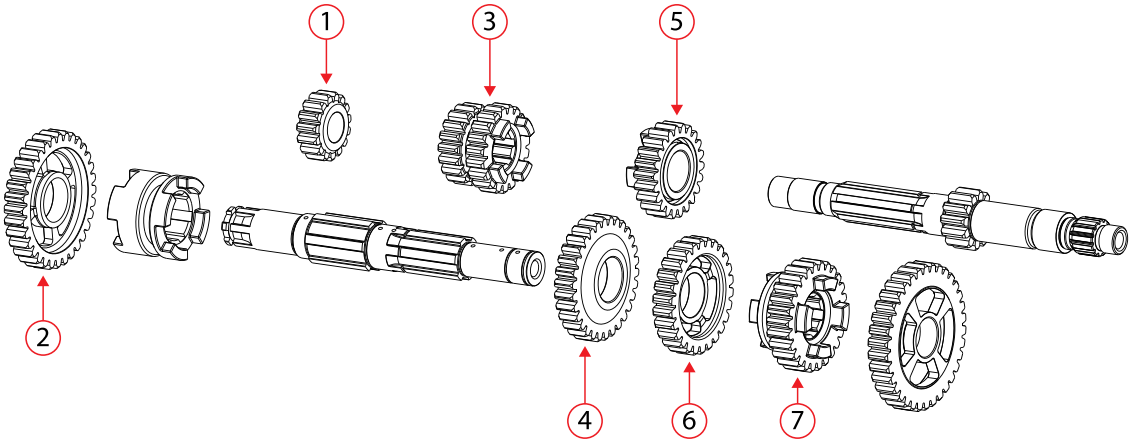

TRANSMISSION GEAR

S/NO	Code No.	Description
1	UMA - 2P - 15T	Gear, 2nd Pinion - (15T)
2	UMA - 2W - 32T	Gear, 2nd Wheel - (32T)
3	UMA - 3P - 18T UMA - 4P - 19T	Gear, 3rd Pinion - (18T) Gear, 4th Pinion - (19T)
4	UMA - 3W - 30T	Gear, 3rd Wheel - (30T)
5	UMA - 4W - 26T	Gear, 4th Wheel - (26T)
6	UMA - 5P - 22T	Gear, 5th Pinion - (22T)
7	UMA - 4W - 26T	Gear, 5th Pinion - (26T)

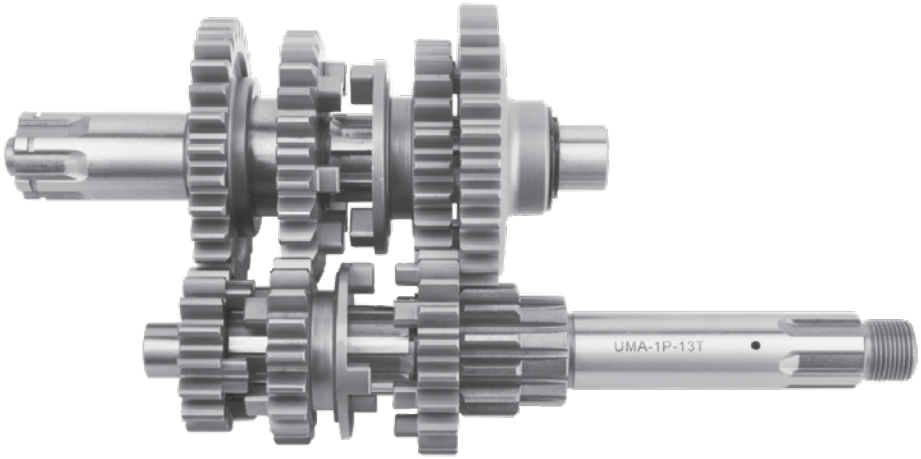

*WITHOUT DRIVE AXLE

Code No.	Model
02GB0010	SRL

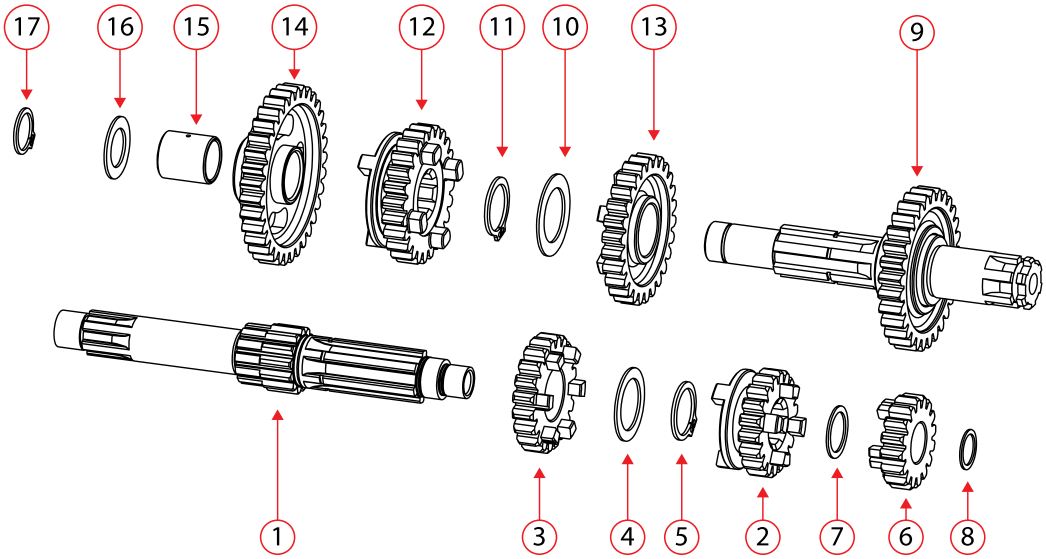

TRANSMISSION GEAR

Ref	Part No.	Description
1	SRL - 17411 - 00	Axle Main - 13T
2	SRL - 17131 - 00	Gear, 3rd Pinion - 18T
3	SRL - 17141 - 00	Gear, 4th Pinion - 20T
4	*90201 - 20266	Washer, Plate T= 1.0
5	*90341 - 20809	Circlip
6	SRL - 17121 - 00	Gear, 2nd Pinion - 16T
7	*90210 - 15566	Washer, Plate T = 0.8
8	*90210 - 12266	Washer, Plate T = 0.7
9	SRL - 17402 - 00 SRL - 17221 - 00	Drive Axle Assembly Gear, 2nd Wheel - 29T
10	*90210 - 21266	Washer, Plate T = 0.7
11	*93410 - 21809	Circlip
12	SRL - 17241 - 00	Gear, 4th Wheel - 24T

Ref	Part No.	Description
13	SRL - 17231 - 00	Gear, 3rd Wheel - 26T
14	SRL - 17211 - 00	Gear, 1st Wheel - 33T
15	*90387 - 1503D	Collar
16	*90201 - 15266	Washer, Plate T = 1.0
17	*99009 - 15400	Circlip

OPTIONAL GEAR

Ref	Part No.	Description
3	SRL - 17141 - 10	Gear, 4th Pinion - 22T
6	SRL - 17121 - 10	Gear, 2nd Pinion - 18T
9	SRL - 17221 - 20 SRL - 17221 - 10	Gear, 2nd Wheel - 30T Gear, 2nd Wheel - 32T
12	SRL - 17241 - 10	Gear, 4th Wheel - 26T

CLUTCH

HYPER CLUTCH

- Minimal chain noise
- Smooth operation
- Supreme durability

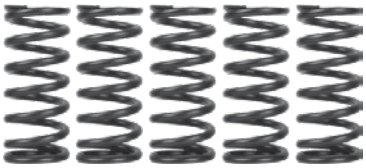

5-Spring for better gear engagement compared to a standard 4-spring setup

Steel insert spline made from stainless steel to reduce wear and tear

4 GEAR CLUTCH

Code No.	Model
02C00040	LC4S / LCES

4 GEAR CLUTCH (DUAL)

Code No.	Model
02C00480	LC4S (Auto)
02C00490	SRL 110 / Y110
02C00700	W100 / EX5
02C00950	SRL 110 (race)

5 GEAR CLUTCH

Code No.	Model
02C00070	LC5S / FZ 150i / R15 V1 & V2

6 GEAR CLUTCH

Code No.	Model
02C00710	Y125Z

SRL 110 (race)

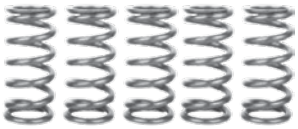

HYPER CLUTCH

Code No.	Model
02C00810	Y15ZR / Y16ZR / R15 V3
02C00920	R25
02C00980	RS 150R

RACE USE

Code No.	Model
02C00950	SRL110 (Racing use)

SLIPPER CLUTCH

- Reduce transmission wear & tear
- Decrease & absorb engine braking force
- Prevent rear wheel lock
- Race proven

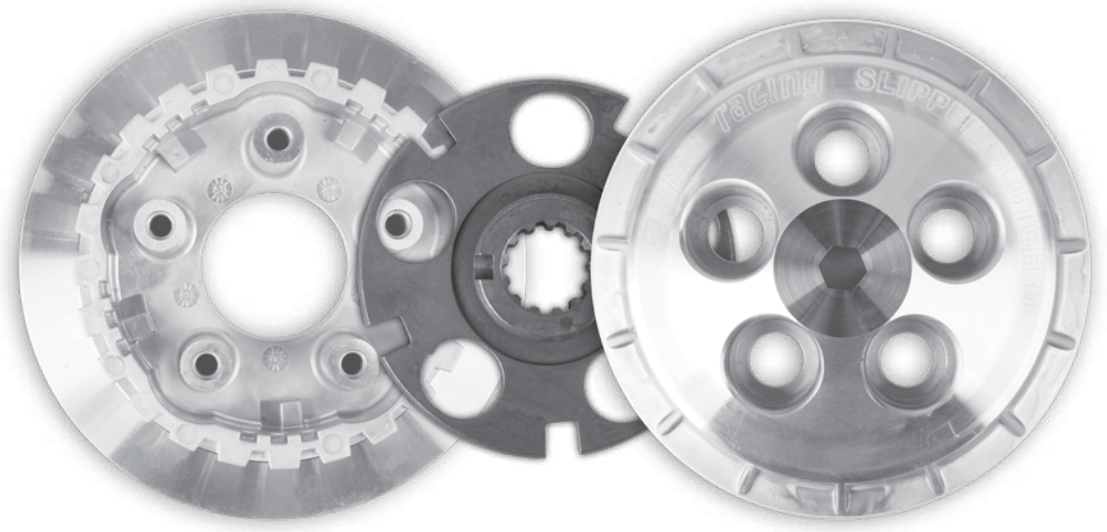

CLUTCH BOSS SLIPPER CAM PRESSURE PLATE

Code No.	Model
02C00890	Y15ZR / Y16ZR
02C01030	RS 150R / SONIC 150

CLUTCH SPRING

Code No.	Model
02C00430	EX5 / EX5 Dream / W100 / W125
02C00440	LCES / LC4S / LC5S / FZ150i
02C00450	RXZ
02C00460	SRL
02C00760	LC 135 Auto Clutch
02C00790	SRL (Old) Auto Clutch
02C00820	R25
02C00860	Y16ZR / Y15ZR / Y125Z
02C00870	KR 150 RR
02C00990	RS150R

CLUTCH PLATE

- Increase clutch shifting smoothness
- Maximum performance & precise power transmission
- Highly durable steel

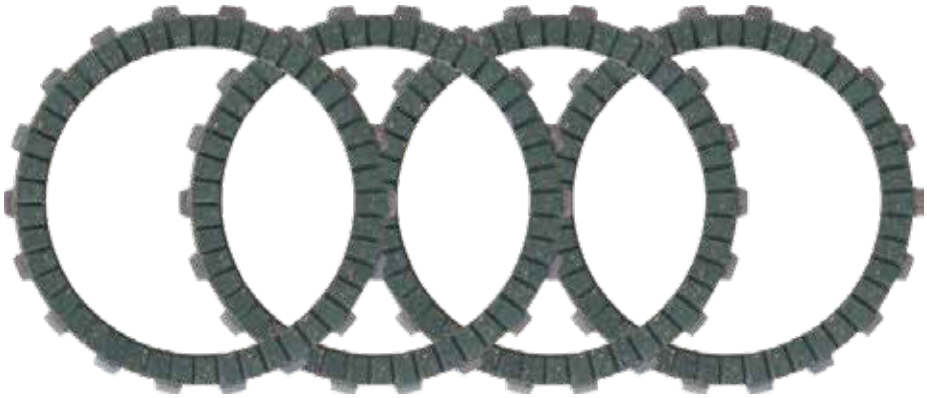

Code No.	Model	Pieces
02CD0010	LC5S	5
02CD0020	EX5	4
02CD0030	WAVE 125	4
02CD0040	LC 135	4
02CD0050	Y125Z	5
02CD0060	R25 / KR150	6
02CD0070	Y16ZR / Y15ZR	4

Code No.	Model	Pieces
02CD0080	R15	3
02CD0110	Y110 / SRL	5
02CD0120	KRISS	5
02CD0140	RS 150R	5
02C00620	RXZ	6
02C00640	Y110	5
02C00910	R25 (carbon V3)	6

STEEL CLUTCH PLATE

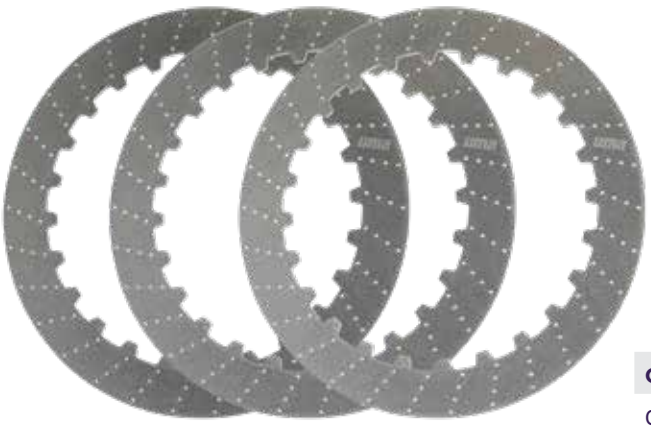

Code No.	Model	Pieces
02CP0020	Y15ZR	3
02CP0010	LC4S	3

CLUTCH PLATE (RACE USE)

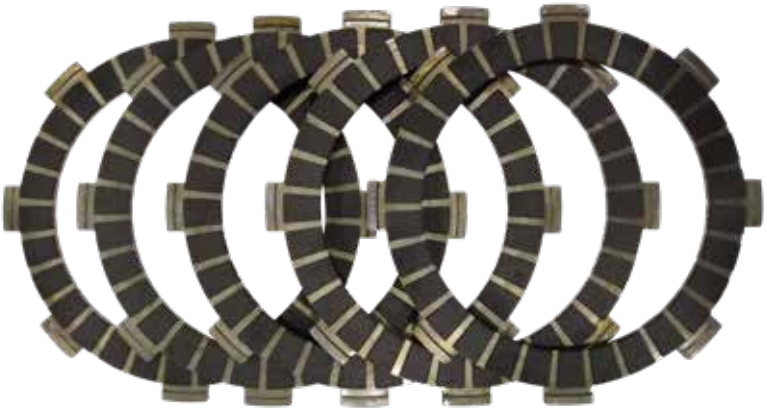

Code No.	Model
02C00960	SRL

CLUTCH PUSH ROD

- High grade steel for maximum strength
- Tuned for consistent performance
- Highly durable & resistant to bending

Code No.	Model
02C01010	Y15ZR

PULLEY ASSEMBLY

CVT PULLEY KIT

- CNC machined
- Reduce noise & vibration
- Better heat dissipation
- Better acceleration & maximum performance
- Improve heat dissipation
- High quality
- Highly durable
- Low noise

Code No.	Model	Roller Size
02P00890	VARIO 125/150	20 x 15 (13.5g)
02P00920	NMAX / NVX	20 x 12 (13g)
02P00930	HONDA BEAT 110	18 x 14 (13g)

RACING PULLEY ASSEMBLY

Code No.	Model	Roller Size
02P00200	MOSKITO	18 x 14 (12g)

Code No.	Model	Roller Size
02P00220	NOUVO LC	20 x 12 (11g)

Code No.	Model	Roller Size
02P00060	EGO	18 x 14 (10g)
02P00210	EGO / EGO S NOUVO / NOUVO S	16 x 13 (9g)

AUTO SPORT CLUTCH SHOE

Code No.	Model
02C00110	EGO / EGO S / NOUVO / NOUVOS

AUTO CLUTCH HOUSING

Code No.	Model
02C00140	EGO

FORGED DRIVE FACE

Code No.	Model
02D00200	ELEGAN

PULLEY ROLLER

ROLLER SIZE : 20 x 12

Code No.	Model	Weight (g)
02P00430	NOUVO LC	8
02P00440		9
02P00400		10
02P00410		11
02P00420		12

ROLLER SIZE : 20 x 12

Code No.	Model	Weight (g)
02PR0506	NMAX / NVX	6
02PR0507		7
02PR0508		8
02PR0509		9
02PR0510		10
02PR0511		11
02PR0512		12

ROLLER SIZE : 15 x 12

Code No.	Model	Weight (g)
02P00690	EGO / EGO S NOUVO / NOUVO S	9
02P00240		10
02P00250		11
02P00260		12

ROLLER SIZE : 16 x 13

Code No.	Model	Weight (g)
02P00300	EGO / EGO S NOUVO / NOUVO S	7.5
02P00310		8
02P00270		10
02P00280		11
02P00290		12
02P00710		9
02P00720		13

ROLLER SIZE : 17 x 12

Code No.	Model	Weight (g)
02P00330	VS	10
02P00340		11
02P00350		12

ROLLER SIZE : 18 x 14

Code No.	Model	Weight (g)
02P00360	MOSKITO / EGO / CLICK	7.5
02P00370		8
02P00380		10
02P00390		11

ROLLER SIZE : 20 x 15

Code No.	Model	Weight (g)
02P00450	ELEGAN	11.5
02P00460		12.5
02P00470		13
02P00480		13.5
02P00490		14.5
02P00500		15.5

AUTO SPRING

TORQUE SPRING

- Quick response in acceleration
- Maximise power transmission
- Super stiff & highly durable
- Reduces belt slippage

Code No.	Model	Size (rpm)
02T00670	NMAX / NVX / VARIO 150 / ADV150 / PCX150	1000
02T00680		1500

1000 RPM

1500 RPM

Code No.	Model	Size (rpm)
02T00160	NOUVO LC	1000
02T00100	NOUVO LC	1500
02T00140	NOUVO LC	2000
02T00150	ICON	1000
02T00120	ICON	2000

1000 RPM

1500 RPM

2000 RPM

Code No.	Model	Size (rpm)
02T00070	EGO	1500
02T00110	EGO	2000
02T00090	NOUVO	1500
02T00130	NOUVO	2000

EXHAUST SYSTEM

The exhaust system in vehicles manages and expels harmful exhaust gases from the engine, contributing to engine performance and environmental friendliness.

090 TRU PRESSURE EXHAUST

091 BACK PRESSURE EXHAUST

uma
racing
EXHAUST SYSTEM
S
SPEC

EXHAUST

TRU PRESSURE EXHAUST

- Enhanced sound
- Plug & play
- Withstand up to 200cc
- Improved horsepower & torque

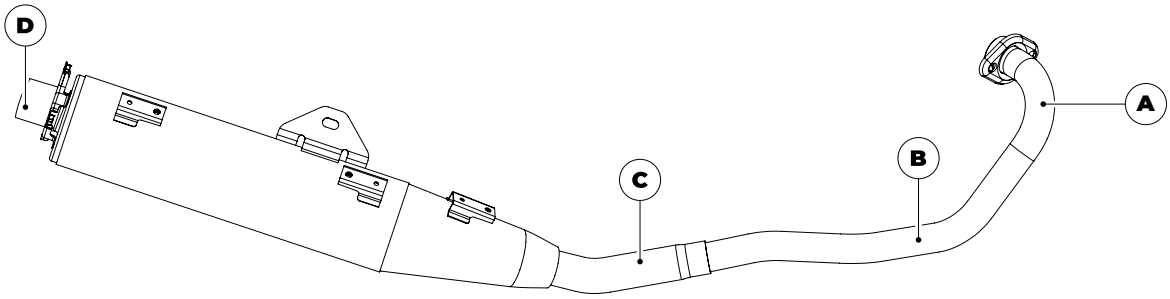

		PIPE DIAMETER (OD) (mm)			
Code No.	**Model**	**A**	**B**	**C**	**D**
02E00120	Y15ZR	31.8	35	38.1	50.8
02E00130	RS 150R	35	38.1	44.5	44.5
02E00140	SYM VF3i	31.8	35	38.1	50.8
02E00160	Y16ZR	31.8	35	38.1	50.8
02E00180	LCV8	31.8	35	38.1	50.8

BACK PRESSURE EXHAUST

- Improves horsepower & torque
- Withstands up to 200 cc
- Plug & Play
- Low noise

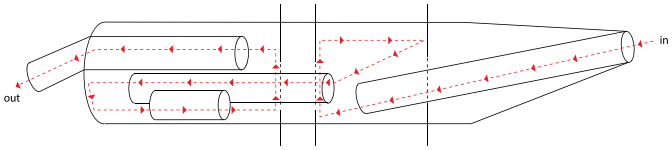

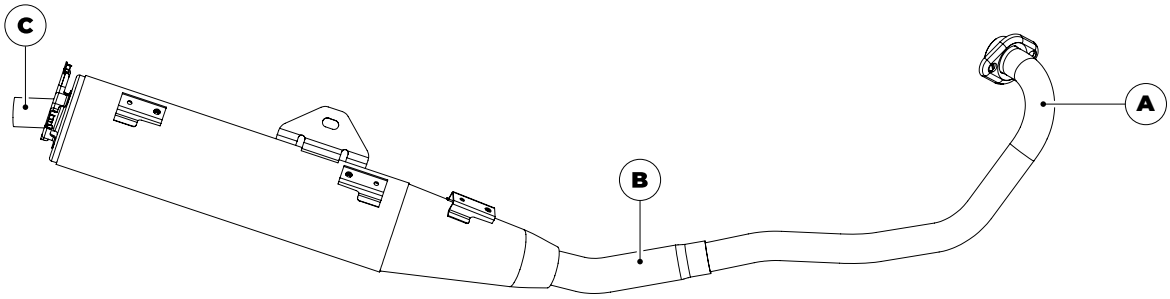

		PIPE DIAMETER (OD) (mm)		
Code No.	**Model**	**A**	**B**	**C**
NEW	RSX / WINNER X / RS150R	31.8	38	31.8
02E00010	Y15ZR	31.8	38.1	31.8
02E00030	LC5S	31.8	38.1 (Hidden Inside Cone)	31.8
02E00040	RS 150R	31.8	38.1	28.6
02E00110	LC4S V2	31.8	38.1 (Hidden Inside Cone)	31.8
02E00170	LCV8	31.8	38.1 (Hidden Inside Cone)	31.8
02R00150	Y16ZR	31.8	38.1	31.8

ELECTRONICS SYSTEM

The modern motorbike's electronics system is a sophisticated integration of various electrical and electronic components aimed at enhancing performance, safety, and convenience.

094 M9 ECU

096 DIGITAL CDI

097 SPARK PLUG

099 QUICK SHIFTER

100 MAGNETO

101 PLUG COIL

102 OTHERS

AVAILABLE ON :

Available on the App Store

Google Play

M9 ECU

Engine Control Unit is a device that controls one or several electrical system to powered a motorcycle.

- New Generation 4-Core MCU
- Computing Speed Increased by 100%
- B-Link Smart Tuning & Real Time Monitoring
- Auto Tune
- Fuel Adjust
- Type B USB Cable
- Bluetooth Connect (Built-in)
- Fuel Acceleration
- Temperature Compensation
- Spark Angle
- Backfire Adjustment
- Peak RPM Limit
- VVA Control
- Speed Gain
- Coolant Fan
- TPS Reset
- Malfunction Code
- Save Maps
- Quick Burn

Code No.	Model
02AR0129	Y15ZR
02AR0130	Y15ZR V2
02AR0131	Y16ZR
02AR0132	RS150
02AR0134	MSX125
02AR0135	MONKEY125
02AR0136	NVX V1 / NVX V2 / NMAX V2
02AR0137	NMAX V1

DIGITAL CDI

IMC DIGITAL CDI

- Increase power
- Enhance engine responsiveness
- Programmable mapping

1 MAP (WITHOUT CONTROLLER)

Code No.	Model
02M01570	LC 135
02M01580	EX5
02M01610	BELANG 6 WIRE (OLD)
02M01620	BELANG 5 WIRE (NEW)

4 MAP (WITH CONTROLLER)

Code No.	Model
02M01110	SRL110,115 / EGO / Nouvo 115
02M01120	LC 135 / LCES / LC4S / LC5S
02M01420	W110
02M1430	W125

CONTROLLER SETTING

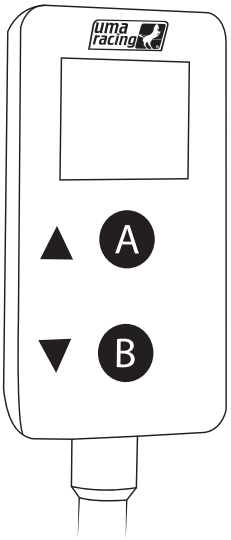

Controller Setting	4 Map IMC Digital CDI Function :
* Press up or down button A or B	-4 Preset Maps
* Press up or down button simultaneously for 3 seconds A or B	- Degree Manipulation -9 to +9

SPARK PLUG

UTECH PERFORMANCE SPARK

Spark plugs are essential for igniting the air-fuel mixture in an engine. They vary in design to meet engine-specific needs. Regularly checking and replacing spark plugs at recommended intervals is crucial for maintaining optimal engine performance and fuel efficiency.

- Promotes better combustion
- Improved throttle response
- Consistent performance
- Longer plug service life
- Improved ignition

Code No.	Model	Type
02SP0001	Universal	AC7R31

Code No.	Model	Type
02SP0002	Universal	AB8R31
02SP0003	Universal	AB9R31

0.5mm
Laser Iridium

Three
Prong Ground

Horsepower Up

Special Gasket
to Keep CR

Nickel Plating
Anti-Corrosion

SPARK PLUG

DIFFERENCES BETWEEN

SPARK PLUG SIZE

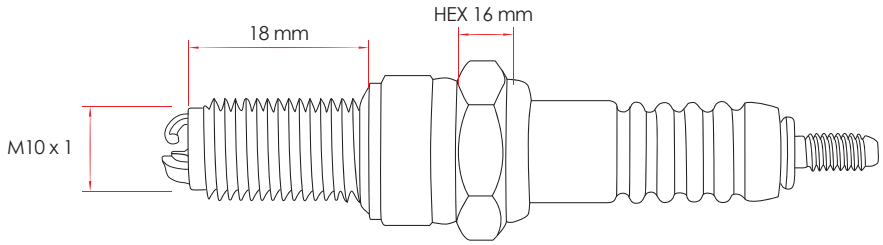

02SP0001

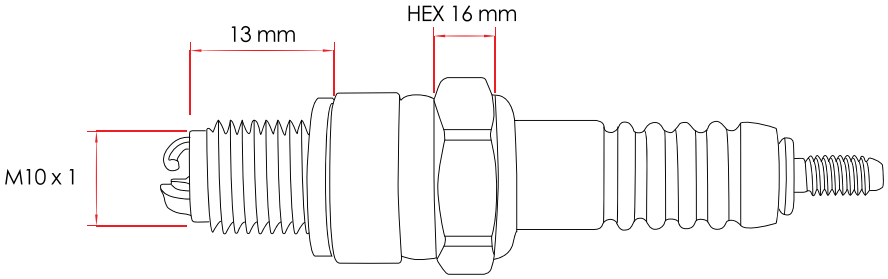

02SP0002 / 02SP0003

02SP0002

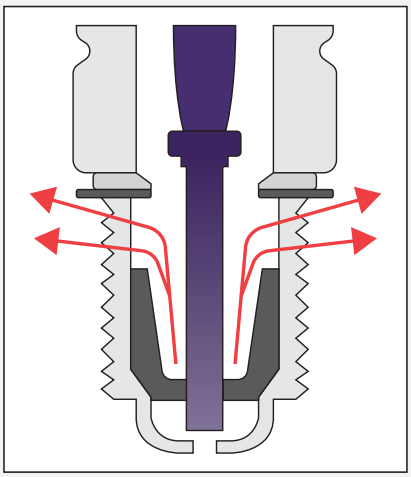

- Suitable for daily use engine
- High durability

02SP0003

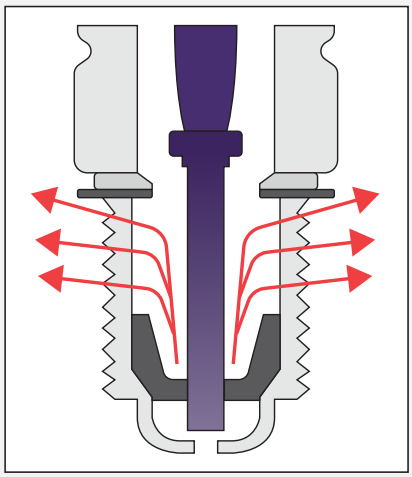

- Suitable for high performance engine
- Withstands higher temperature

QUICK SHIFTER

- Reduces wear & tear on clutch and transmission
- Suitable for use with CDI
- Plug & play installation
- Clutch-less shifting

TENSION

COMPRESSION

Code No.	Model	Type
02AR0062	Universal	TENSION
02AR0063		COMPRESSION

DIFFERENCES BETWEEN ‘ TENSION ’ & ‘ COMPRESSION ’

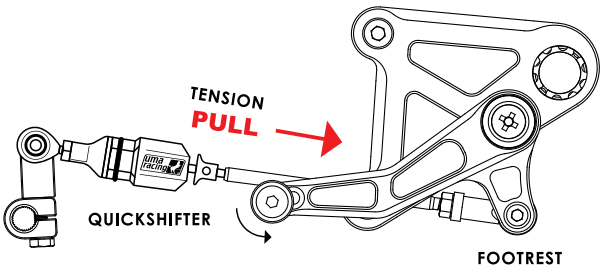

TENSION

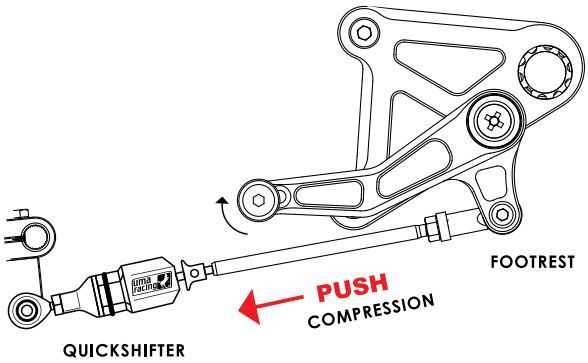

COMPRESSION

MAGNETO

SUPER LIGHT IGNITION ROTOR

- Improve throttle response
- Improve acceleration
- Lightweight
- Race Proven!

Code No.	Model	Weight
02I00270	Y16ZR / Y15ZR	1.22 kg
02I00360	LC135 4S	0.967 kg
02I00370	LC135 5S	0.974 kg

PLUG COIL

- Improve engine response
- Accurate & consistent performance
- Greater & more stable energy output
- Plug & play

PLUG COIL (Non-FI)

Code No.	Model
02PC001P	Universal

PLUG COIL (FI)

Code No.	Model
02PC002R	Universal

OTHERS

CDI CONTROLLER

Code No.	Model
02M01400	Universal

CDI ADVANCED CONTROLLER

Code No.	Model
02M01350	Universal

G1 SIGNAL CONTROLLER

Code No.	Model
02S00180	YAMAHA

START STOP SWITCH

Code No.	Model
02S00100	Universal

ENGINE STOP SWITCH

Code No.	Model
02S00110	Universal

FUEL INJECTION CONTROLLER

Code No.	Model
02F00130	W110

OTHER PARTS & ACCESSORIES

Motorcycle accessories are additional components and add-ons that riders can equip on their motorcycles to enhance comfort, safety, style, and functionality.

104 QUICK THROTTLE

105 BYPASS

107 SPEEDOMETER

QUICK THROTTLE

- Increase responsiveness
- Shorter stroke
- Larger pulley

SET

Code No.	Model
02Q00010	LC 135
02Q00020	Scooter
02Q00030	EX5 / LC / SRL

CABLE ONLY

Code No.	Model
02Q00040	LC 135
02Q00050	Scooter

PIPE WITHOUT CABLE

Code No.	Model
02Q00060	Universal

Code No.	Model	Colour
02Q00090	Y15ZR / EXCITER 150	Black
02Q00100		Chrome

BYPASS

45°

Code No.	Model	Colour
02B0042A	YAMAHA / HONDA	Blue
02B0042B		Black
02B0042G		Gold
02B0042R		Red

90°

Code No.	Model	Colour
02B0043A	YAMAHA / HONDA	Blue
02B0043B		Black
02B0043G		Gold
02B0043R		Red

Code No.	Model	Colour
02B0044A	SUZUKI	Blue
02B0044B		Black
02B0044G		Gold
02B0044R		Red

Code No.	Model	Colour
02B0021A	KAWASAKI / MODENAS	Blue
02B0021B		Black
02B0021G		Gold
02B0021R		Red

BYPASS VENT HOSE

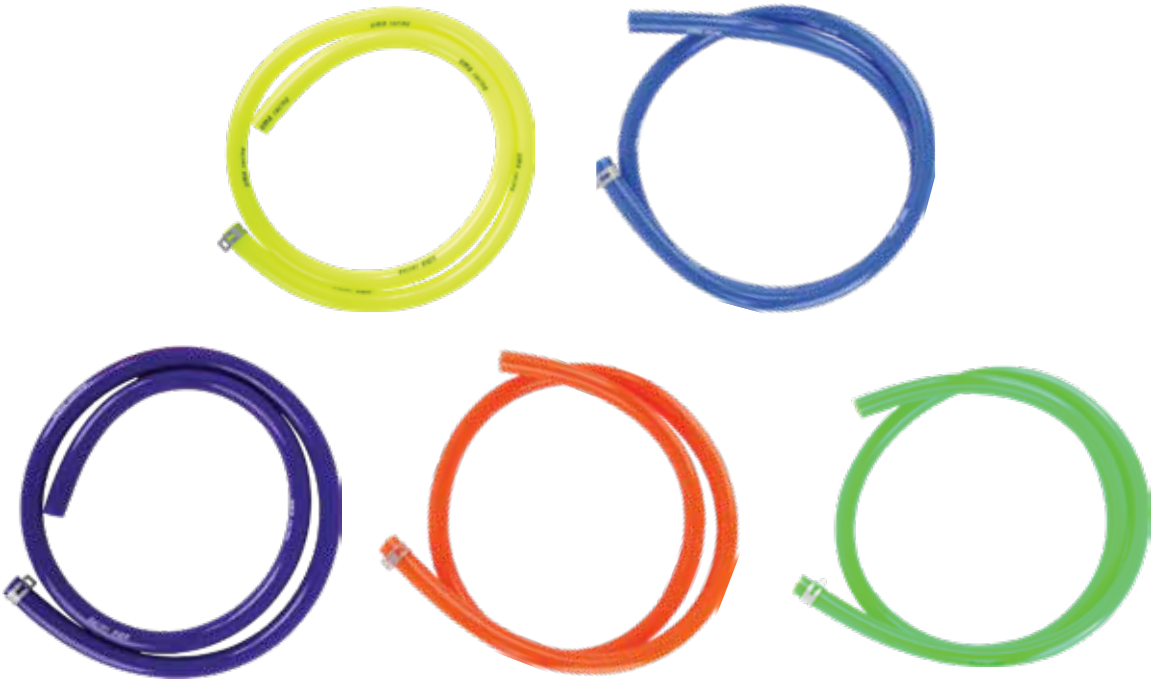

Code No.	Model	Colour
02B00290	Universal	Neon Blue
02B00300		Neon Green
02B00310		Neon Orange
02B00320		Neon Purple
02B00330		Neon Yellow

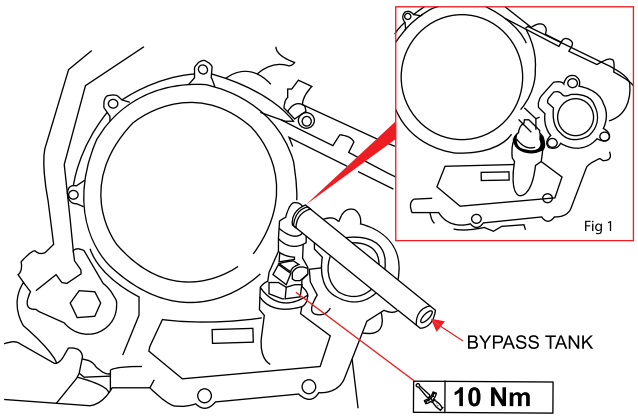

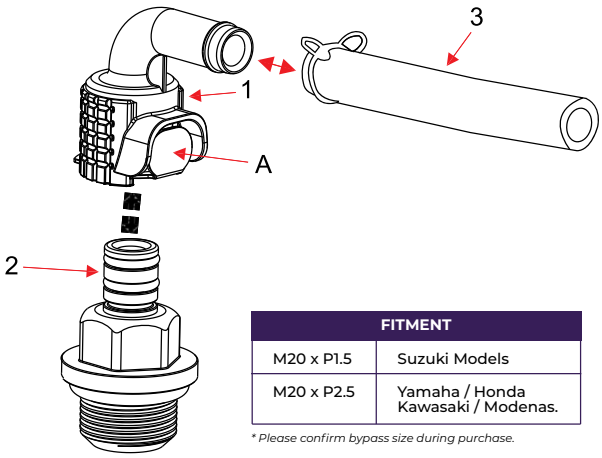

FITMENT	
M20 x P1.5	Suzuki Models
M20 x P2.5	Yamaha / Honda Kawasaki / Modenas.

** Please confirm bypass size during purchase.*

STEP-BY-STEP INSTRUCTIONS :

Step 1 : Push button ' **A** ' to release base

Step 2 : Remove original oil level from bike (Fig 1)

Step 3 : Install new bypass

Step 4 : Connect vent hose to bypass

SPEEDOMETER

UTECH SPEEDOMETER

Code No.	Model
02M01600	Y15ZR

FUNCTION

- Speedometer
- Shift light
- Temperature °C / °F
- Clock
- Air / Fuel ratio
- Odometer
- Throttle Position Sensor (TPS)
- Volt Indicator
- Black Light
- Trip meter
- Water temperature
- Fuel gauge
- Oil Temperature
- Speed Warning light
- Gear indicator
- Target distance timer
- Tachometer
- Temperature Alarm
- Hour meter

DIGITAL SP METER 8 COLOUR LIGHT

Code No.	Model
02M00140	LC5S

FUNCTION

- Speedometer
- Shift light
- Volt indicator
- Odometer
- Air / Fuel ratio
- Fuel gauge
- Trip meter
- Water thermometer
- Clock
- JIS D 0203
- Backlight

SP METER 8 COLOUR LIGHT

Code No.	Model
02M00160	LC 135

FUNCTION

- Speedometer
- Shift light
- Volt indicator
- Odometer
- Air / Fuel ratio
- JIS D 0203
- Fuel gauge
- Trip meter
- Water thermometer
- Clock
- Tachometer
- Backlight

DIGITAL LCD METER BLUE BLACK LIGHT

Code No.	Model
02M00150	EX5

FUNCTION

- Speedometer
- Shift light
- Volt indicator
- Odometer
- Air / Fuel ratio
- JIS D 0203
- Fuel gauge
- Trip meter
- Water thermometer
- Clock
- Tachometer
- Backlight

BIKE MODELS BY COUNTRIES

Manufacturers consider cultural, linguistic, legal, and marketing factors to choose suitable names for products in different markets, creating localized appeal and potentially boosting sales and acceptance.

POWERED BY uma racing
www.umaracing.com

BIKE MODEL BY COUNTIES

YAMAHA

MALAYSIA	THAILAND	PHILIPPINES	VIETNAM	BERMUDA	INDONESIA
Y16ZR	EXCITER 155	SNIPER 155	EXCITER 155	N / A	MX KING 155
EGO	MIO	MIO SPORTY	SPORTY	SPORTY	MIO SPORTY
EGO S	MIO MX	MIO ULTIMD	MIO SOUL	MIO SOUL	MIO SOUL
EGO LC125	MIO 125	MIO i 125	MIO 125	MIO 125	MIO 125
FZ 150i	FZ 150	FZ 150	VIXION	VIXION	VIXION
LC135	SPARK 135	SNIPER 135	EXCITER 135	SPARK	JUPITER MX-135
LCES	SPARK 135	SNIPER 135	EXCITER 135	SPARK	JUPITER MX-135 AUTO
LC4S	SPARK 135 4S	SNIPER 135 4S	EXCITER 135 4S	SPARK	JUPITER MX-135 CLUTCH
LC5S	SPARK 135 5S	SNIPER 135 5S	EXCITER 135 5S	SPARK	JUPITER MX 5 SPEED
LCV8	N / A	N / A	N / A	N / A	N / A
NMAX	NMAX	NMAX	NM-X	N / A	NMAX
NOUVO	NOUVO	NOUVO	NOUVO Z 115	NOUVO Z 115	NOUVO Z
NOUVO S	NOUVO MX	NOUVO RC	NOUVO Z 115	NOUVO Z 115	NOUVO S
NOUVO LC	NOUVO 135	NOUVO RC GP	ELEGANCE	ELEGANCE	N / A
NVX	AEROX 155	AEROX 155	NVX	N / A	AEROX 155 VVA
RXZ	RXZ	N / A	RXZ135	RXZ135	N / A
SRL 110	SPARK 110	JUPITER	JUPITER	SPARK / NAND	JUPITER Z
SRL 115	N / A	JUPITER R	JUPITER F1	SPARK / NAND	JUPITER Z
SRLZ	N / A	JUPITER RC	JUPITER	SPARK / NAND	JUPITER Z1
Y125Z	Y125Z	Y125Z	Y125Z	N / A	Y125Z
Y15ZR	EXCITER 150	SNIPER 150	EXCITER 150	N / A	MX KING 150
X-MAX	X-MAX	X-MAX	X-MAX	X-MAX	X-MAX
R15	R15	R15	R15	N / A	R15
R25	R3	R3	R3	N / A	R25
MT-15	MT-15	MT-15	MT-15	N / A	MT-15
MT-25	MT-03	MT-03	MT-03	N / A	MT-25

HONDA

MALAYSIA	THAILAND	PHILIPPINES	VIETNAM	BERMUDA	INDONESIA
VARIO	CLICK	CLICK	VARIO	CLICK	VARIO
EX5	DEAM KURUSAPA	DREAM	DREAM	N / A	DREAM
EX5 DREAM	DREAM	DREAM	DREAM	N / A	DREAM
EX5 110	DREAM 110i	SUPER DREAM	SUPER DREAM	N / A	N / A
BEAT	ICON	BEAT	BEAT	ICON	BEAT
RS150R	RS150R	SUPRA GTR	WINNER	N / A	SUPRA GTR
WAVE 100	WAVE 100	WAVE ALPHA	WAVE ALPHA	WAVE 110	SUPRA FIT
WAVE 110	WAVE 150 200T	WAVE S 110	WAVE S 110	WAVE 125i	RENO ABSOLUTE
WAVE 110 DX	WAVE 110	WAVE X	WAVE X	N / A	N / A
WAVE 125	WAVE 125	N / A	N / A	WAVE 125	WAVE 125
PCX	PCX	PCX	PCX	N / A	PCX
ADV 150	ADV 150	ADV 150	N / A	ADV 150	ADV 150
RS-X	N / A	WINNER-X	WINNER-X	N / A	N / A

SUZUKI

MALAYSIA	THAILAND	PHILIPPINES	VIETNAM	BERMUDA	INDONESIA
RAIDER 150	RAIDER 150	RAIDER 150	RAIDER F 150	RAIDER 150	SATRIA 150
RGS	AKIRA	N / A	RG SPORT	SMASH	N / A
SHOGUN 110	BEST 110	SHOGUN 110	SHOGUN	N / A	SHOGUN 110
SMASH PRO 110	SMASH 115	SMASH 115	SMASH 115	SMASH 115	SMASH 115
VS	N / A	N / A	N / A	N / A	N / A

Kawasaki

MALAYSIA	THAILAND	PHILIPPINES	VIETNAM	BERMUDA	INDONESIA
NINJA KRR150	NINJA KRR150	NINJA KRR150	NINJA KRR150	NINJA KRR150	NINJA KRR150
NINJA 250	NINJA 250	NINJA 250	NINJA 250	NINJA 250	NINJA 250
KLX 150	KLX 150	KLX 150	KLX 150	KLX 150	KLX150
KSR 110	KSR 110	KSR 110	KSR 110	KSR 110	KSR 110

MODENAS

MALAYSIA	THAILAND	PHILIPPINES	VIETNAM	BERMUDA	INDONESIA
KRISS	N / A	N / A	N / A	N / A	N / A

Benelli

MALAYSIA	THAILAND	PHILIPPINES	VIETNAM	BERMUDA	INDONESIA
RFS150i	N / A	RFS150i	N / A	N / A	N / A

SYM

MALAYSIA	THAILAND	PHILIPPINES	VIETNAM	BERMUDA	INDONESIA
VF3i 185	N / A	VF3i 185	STAR SR 170i	N / A	N / A

OFFICIAL DISTRIBUTOR
ASIA

MALAYSIA (WEST)
(UMA RACING HEADQUARTERS)

MENG KAH AUTO PARTS TRADING SDN. BHD.RESEARCH & DEVELOPMENT OFFICE

No. 40, Jalan TPP5, Taman Perindustrian Putra, 47130 Puchong, Selangor.

TEL : +603 5033 5833 / +603 2773 9011

Email : enquiry@umaracing.com

Website : www.umaracing.com

MALAYSIA (SARAWAK)

GHEE YONG ENTERPRISE SDN. BHD.

No. 56 & 58, Jalan Ellis, 93300 Kuching, Sarawak, Malaysia.

TEL : +082 411 153 / +082 441 557

Email : gheeyong@gheeyong.com.my

Website : www.facebook.com/gheeyong58

MALAYSIA (SABAH)

EKO KEN MOTOR

Lot 3, Tingkat Bawah, Kedai Golden Plaza Donggongon, 89507 Donggong Penampang, Sabah.

TEL : +082 411 153 / +082 441 557

Email : gheeyong@gheeyong.com.my

Website : www.facebook.com/gheeyong58

SINGAPORE

MKA MOTORPARTS ASIA PTE.LTD

8 Kaki Bukit Avenue 4, #04-39 Premier @ Kaki Bukit, Singapore 415875.

TEL : +65 6546 4646 / +65 6547 4658

Email : info@motorparts.asia

Website : www.motorparts.asia

INDONESIA

PT. ENWAN MULTI PARTINDO

Pergudangan Bizpoint, Sukamulya Kec. Cikupa, Tangerang, Banten, Indonesia 15710 Bizpoint 5 Blok LV No. 57, 59, & 61

TEL : 021 5966 1301 / 021 5966 1144

Email : info@enwan.co.id

Website : www.enwan.co.id

THAILAND

RACING BOY CO. LTD

88 M005, Saothonghin, Bangyai, Nonthaburi, Thailand 11140.

TEL : +66 (0)2 889 6697 / +66 (0)2 889 6697

Email : rbracingboy@gmail.com

Website : www.fb.com/racingboy.th

PHILIPPINES

BOB'S SCOOTER TRADING

Sitio Gipit San Jose Patag, STA Maria, Bulacan, Philippines 3022.

TEL : +63 922 841 4188 / +63 917 557 0636

Email : racingboyphl@gmail.com

Website : www.racingboy.com.ph

CAMBODIA

TAKA MOTOR CO., LTD

#62, St.310, Sangkat Toul Svay Prey 2, Khan Boeng Keng Kong, Phnom Penh, Cambodia.

TEL : +(855)78 444 144 / +(855)85 852 800

Email : Guechphea55@gmail.com

Website : www.facebook.com/laopuychhay/

VIETNAM

MINH HOH VIETNAM LIMITED LIABILITY COMPANY

21 Tan Tao, Tan Tao A, Binh Tan, Ho Chi Minh City

TEL : +84 028 3622 2285

Website : ketoan@racingboy.com.vn

TAIWAN

OOTORI RACING INTERNATIONAL CO., LTD

No.203-6, Chaoma Rd., Xitun Dist.,Taichung City 40755, Taiwan (R.O.C.).

TEL : +886 04 2359 6300

Email : racingboytw@gmail.com

Website : www.facebook.com/racingboy.id

INDIA

LRL MOTORS PVT.LTD

Kumbalam, NH Bypass Kochi, 682506

TEL : +91 9539330000

Email : khais@lrlmotors.com

Website : www.lrlmotors.com

MYANMAR

RACING BOY MYANMAR CO. LTD

No 20, Yehtarna Street, Maung Ngan Kwin Quarter Mawlamyine (Township), Mon State, Myanmar.

TEL : +094 2504 1530 / +094 2526 2458

Email : 5star.eppk@gmail.com

Website : www.fb.com/racingboy.mm

JAPAN

KN926 CO., LTD

5-31-2, Kitabefu, Nishi-ku, Kobes-shi, Hyougo, 651-2117, Japan

TEL : +81 78 224 5230

Email : shop@kn926.net

Website : www.facebook.com/racingboyjapan

KOREA

DEAN MOTOR TRADING

541, Bangeojinsunhwando-ro, Dong-gu, Ulsan, Republic of Korea ZIPCODE 44090

TEL : +82 52 251 7008 / +82 52 235 8211

Email : ducati916sps@hotmail.com

Website : www.rcbkorea.modoo.at

EUROPE

GREECE

MOTOTRADE MAVRIDI

Katsimidou STR 10 Lagadas Thessaloniki, 57200, Greece.

TEL : +30 23940 23669 / +30 23940 20846

Email : info@mototrade.gr

Website : www.racingboy.gr

LA RÉUNION

XMAX CONCEPT

N51 Rue Tessan Appt n°21, Résidence " Les Ombrelles", Sainte Clotilde (réunion), 97490 France.

TEL : +0692 61 59 71

Email : ludovall@gmail.com

Website : www.xmaxconcept.com

NORTH AMERICA

BERMUDA

CARDOSO CUSTOMS & REPAIR., LTD

#11, South Breakers Road Smiths, Bermuda, HS-01.

TEL : +441 538 5389 / +441 295 1386

Email : info@ccrpartshop.com

Website : www.ccrpartshop.com

uma racing®

POWERED BY uma racing

www.umaracing.com

UMA RACING SDN BHD (591428-P)
NO. 40, JALAN TPP5, TAMAN PERINDUSTRIAN PUTRA,
47130 PUCHONG,SELANGOR DARUL EHSAN, MALAYSIA
HOTLINE: +603 5033 5833 FAX: +603 2773 9011
www.umaracing.com

www.umaracing.com

AWARDS:

UMA RACING SDN BHD (591428-P)
NO. 40, JALAN TPP5, TAMAN PERINDUSTRIAN PUTRA,
47130 PUCHONG,SELANGOR DARUL EHSAN, MALAYSIA
HOTLINE: +603 5033 5833 FAX: +603 2773 9011
www.umaracing.com