REVEAL TRUE PERFORMANCE.

www.umaracing.com

PRODUCT CATALOGUE 2022/23

■ TEAM'S CHOICE ■ RACE PROVEN ■ HIGH QUALITY ■ IN-HOUSE R&D

MOTORCYCLE PERFORMANCE PARTS
TECHNOLOGY BY UMA RACING

uma racing®

MOTORCYCLE ENGINE OIL

NEW
REVEAL THE TRUE PERFORMANCE
uma racing
MOTORCYCLE ENGINE OIL
HP3000
FULL SYNTHETIC
4T
SAE 10W-30
API SN JASO MA2
1 LITER (1.05 QUART)
R SPEC
S SPEC
uma racing
REVEAL THE TRUE PERFORMANCE
uma racing
MOTORCYCLE ENGINE OIL
HP2000
SEMI SYNTHETIC
4T
SAE 10W-40
API SN JASO MA2
1 LITER (1.05 QUART)
S SPEC
uma racing

CONTENTS

007 INTRODUCTION

009 PRODUCT DEVELOPMENT PROCESS

013 GLOBAL MARKET

017 SPONSORSHIP

024 ENGINE OIL

025 MINERAL ENGINE OIL

025 SEMI & FULL SYNTHETIC

027 ENGINE POWER PARTS

028 SUPERHEAD

031 CYLINDER BLOCK

039 GASKETS

040 PISTONS & PARTS

042 CONNECTING ROD

043 CRANKSHAFT

044 OIL PUMP

044 DLC ROCKER ARM SHAFT

045 VALVE

046 VALVE SPRING

047 HIGH CAM

049 CAM STOPPER

049 TIMING CHAIN

049 SILENT CHAIN

050 GUIDE RAIL

050 DEGREEE WHEEL KIT

051 TIMING GEAR

053 FUEL SYSTEM

054 AIR FILTER DUAL KIT

055 AIR FILTER KIT

057 THROTTLE BODY

059 FUEL PUMP

059 FUEL INJECTOR

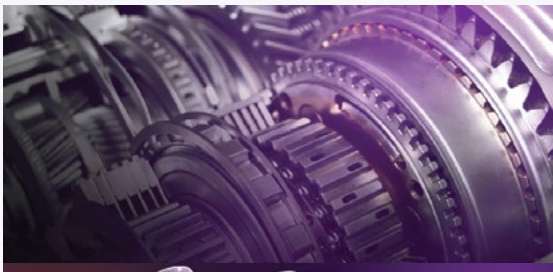

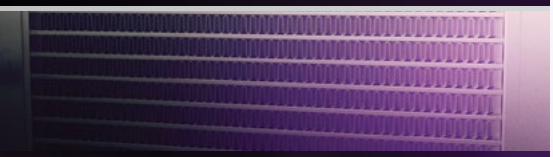

060 AIR FILTER
061 AIR FUNNEL
062 VR CARBURETOR
062 PWK CARBURETOR V2
063 CARBURETOR PARTS

068 COOLING SYSTEM
069 RADIATOR

070 TRANSMISSION
071 QUICKMISSION GEARBOX
072 GEARBOX
073 CLUTCH
076 PULLEY ASSEMBLY
079 AUTO CLUTCH SPRING

080 EXHAUST
081 TRU PRESSURE EXHAUST
081 BACK PRESSURE EXHAUST

083 ELECTRONICS SYSTEM
084 ECU & MODULE
085 IMC DIGITAL CDI
086 QUICK SHIFTER
087 MAGNETO
088 SPARK PLUG
089 PLUG COIL
090 OTHERS

091 OTHER PARTS & ACCESSORIES
092 QUICK THROTTLE
093 BYPASS
094 VENT HOSE
095 SPEEDOMETER

097 MOTORCYCLE MANUFACTURERS

PETRONAS
2020
OVERALL CHAMPION
CP125

INTRODUCTION

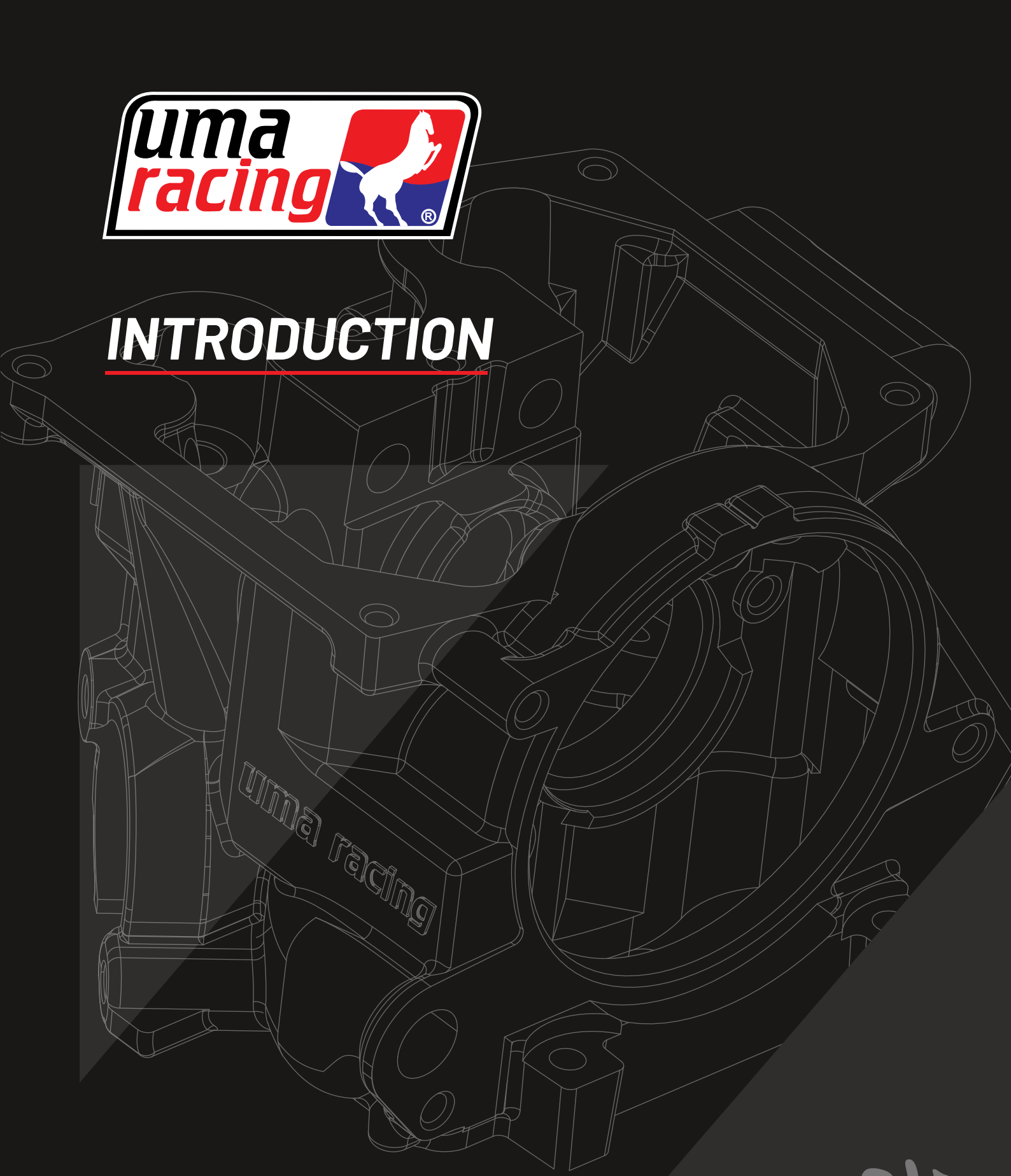

uma racing

INTRODUCTION

Established in 2002, **UMA Racing Sdn Bhd** began its journey in Malaysia under a joint venture between Meng Kah Auto Parts Trading Sdn Bhd and Maju Motor Racing as both parties had similar interests in providing high performance Motorcycle parts to the industry. With the iconic 'UMA Racing' horse standing proud within our logo, 'HORSE POWER' has remained our main focus, pride and success.

Over the years, UMA Racing has developed many innovative and high-performance parts proven both on and off the racing circuit. With Japanese Chief Engineer, Yoshio Hirano at the helm, along with his team of technical engineers, have continuously carried out necessary research and development using state-of-the-art technology to further enhance the brand's products in meeting the consumers' ever-demanding high-performance expectations.

Being one of the main pioneers in our field, UMA Racing is widely recognized across the motorcycle industry as one of the top Motorcycle performance parts manufacturers that specifically caters to those wish to 'REVEAL THE TRUE PERFORMANCE' of their machines. All of our products have gone through intensive hands-on engineering and testing on both Performance and Electronic parts to ensure that each product provides the best experience to any rider.

UMA Racing's uncompromised product quality is made from the finest materials for maximum durability. This is why UMA Racing stands out from its competitors. Tested and reviewed by professional riders all across the globe, UMA racing products has made its way into both Local and International Motorcycle Racing Championships. Our outreach spans throughout the 4-corners of the world which includes; Singapore, Indonesia, Thailand, Cambodia, Vietnam, Taiwan, Philippines, Myanmar, India, Japan, Korea, Australia, Bermuda (North America), Greece and France (Europe). We shall continue to expand our passion through our products in igniting the true meaning of performance within the hearts of all Riders around the globe.

PRODUCT DEVELOPMENT PROCESS

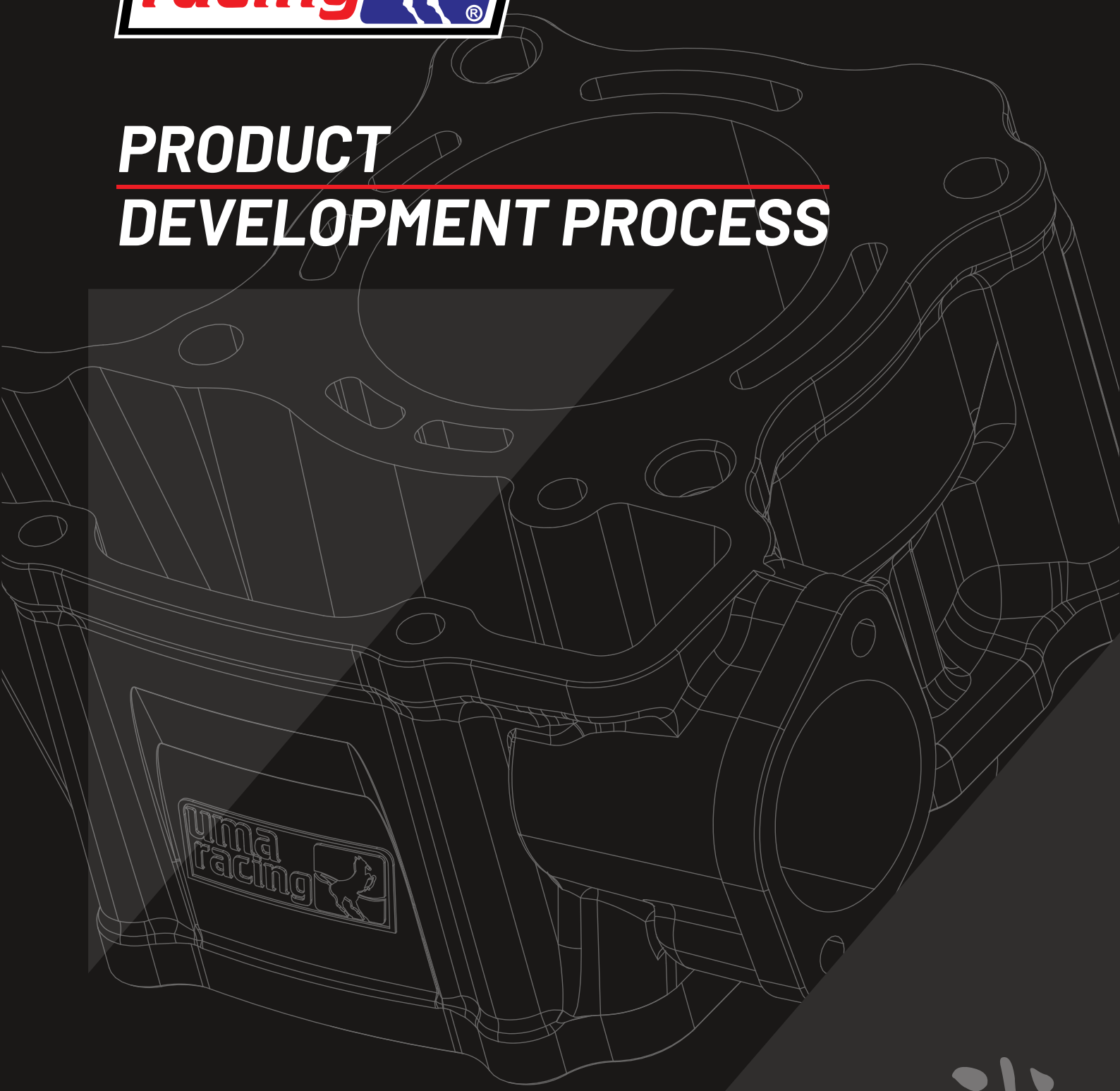

MOTORCYCLE PERFORMANCE PARTS
TECHNOLOGY BY UMA RACING

PRODUCT DEVELOPMENT PROCESS

UMA Racing is capable of providing a "from start to finish" product research and development solution for innovative and high precision products to meet consumer demands.

STAGE 1

RESEARCH AND DEVELOPMENT PROCESS

Product Design

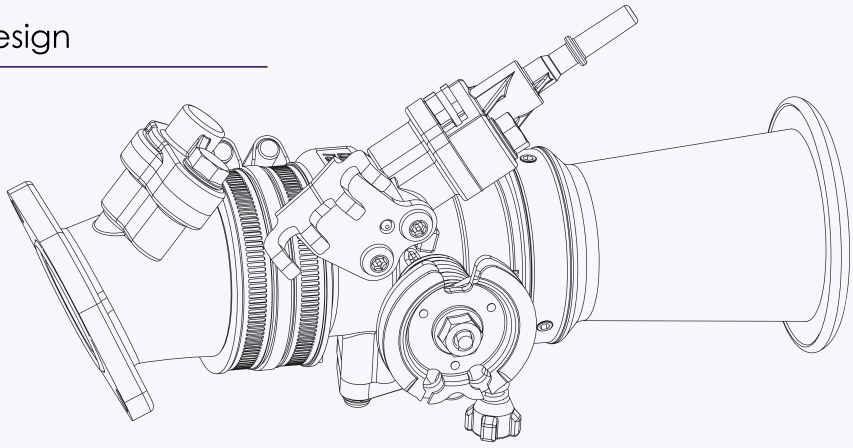

3D Modeling

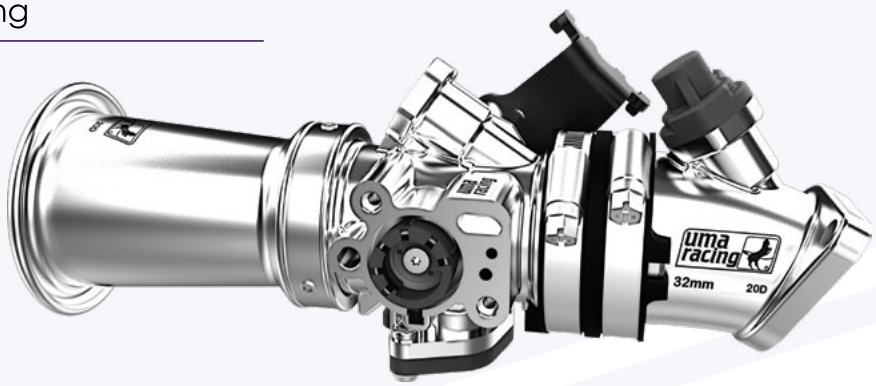

3D Printing

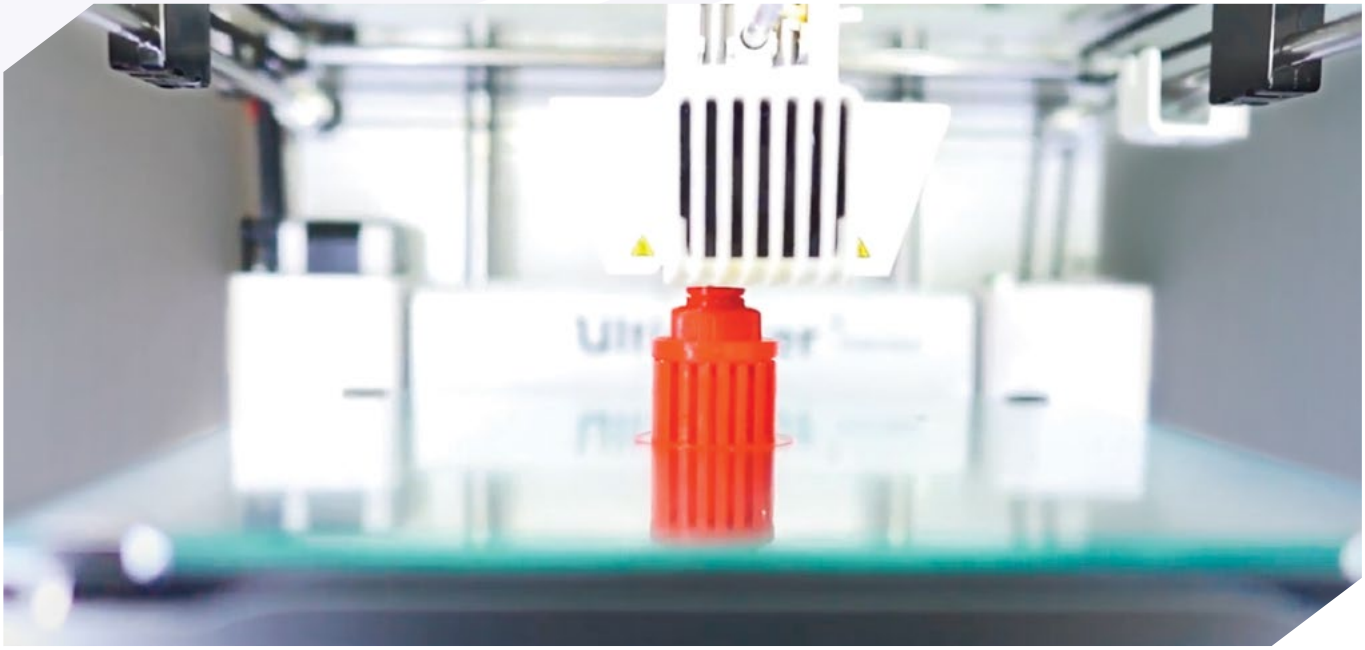

Production

Measurement Test

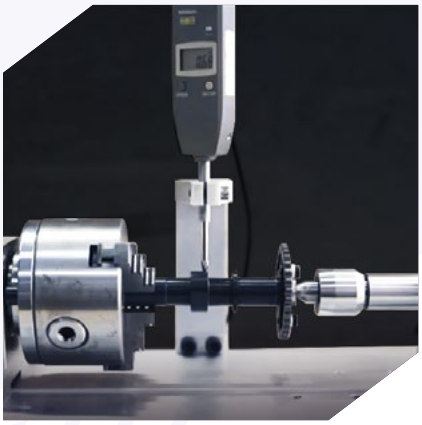

Dyno Jet System / Product Performance Testing

STAGE 2
DESIGN AND MARKETING

Packaging Design

Advertising

Product Finalisation

STAGE 3
FREIGHT TRANSPORT

Logistics

Warehouse

Distribution

End User

GLOBAL MARKET

MOTORCYCLE PERFORMANCE PARTS
TECHNOLOGY BY UMA RACING

GLOBAL MARKET

BUSINESS ASSOCIATES

From our headquarters in Malaysia, we have expanded our reach across the world. Our sales network spreads throughout Singapore, Thailand, Philippines, Vietnam, Cambodia, Myanmar, Bermuda, and also in Europe, Greece & France. Allowing us to meet any demands in terms of both design and production.

UMARACING
DISTRIBUTOR

15

COUNTRIES
IN THE WORLD

DISTRIBUTOR
INDIA
DISTRIBUTOR
MYANMAR
DISTRIBUTOR
THAILAND
DISTRIBUTOR
JAPAN
DISTRIBUTOR
SOUTH KOREA
DISTRIBUTOR
TAIWAN
DISTRIBUTOR
VIETNAM
HEADQUARTERS
MALAYSIA
DISTRIBUTOR
PHILIPPINES
DISTRIBUTOR
SINGAPORE
DISTRIBUTOR
CAMBODIA
DISTRIBUTOR
INDONESIA

ASIA

MALAYSIA (HQ)

UMA RACING Sdn Bhd
No.40, Jalan TPP5, Taman Perindustrian Putra, 47130 Puchong, Selangor.

Tel : +03 5033 5833
Fax : +03 2773 9011
Email : enquiry@umaracing.com
Web : www.umaracing.com
www.fb.com/umaracing.official

MALAYSIA (SARAWAK)

GHEE YONG ENTERPRISE Sdn Bhd
No. 56 & 58, Jalan Ellis, 93300 Kuching, Sarawak, Malaysia

Tel : +082 411 153
Fax : +082 441 557
Email : -
Web : www.fb.com/gheeyong58

MALAYSIA (SABAH)

EKO KEN MOTOR
Lot 3, Tingkat Bawah,
Kedai Golden Plaza Donggongon,
89507 Donggong Penampang, Sabah.

Tel : +088 718 735
Fax : -
Email : -
Web : www.fb.com/EKKMSB

SINGAPORE

MKA MOTORPARTS ASIA PTE.LTD.
8 Kaki Bukit Avenue 4, #04-39 Premier @ Kaki Bukit, Singapore 415875.

Tel : +65 6546 4646
Fax : +65 6547 4658
Email : info@motorparts.asia
Web : -

INDONESIA

PT. ENWAN MULTI PARTINDO
Pergudangan Bizpoint, Sukamulya Kec. Cikupa, Tangerang, Banten, Indonesia 15710
Bizpoint 5 Blok LV No. 57, 59, & 61

Tel : +62 21 5966 1301
Fax : +62 21 5966 1144
Email : info@enwan.co.id
Web : https://enwan.co.id

THAILAND

RACING BOY CO., LTD
88 M005, Saothonghin, Bangyai, Nonthaburi, Thailand 11140.

Tel : +66 (0)2 889 6697
Fax : +66 (0)2 889 6697
Email : -
Web : www.fb.com/UmaRacing-th-665059510290144

VIETNAM

XNK TM MINH GIAI CO., LTD
49/5 Lương Thế Vinh .P Tân Thới Hoà. Q Tân Phú, TP Ho Chi Minh, Viet Nam.

Tel : +028 3601 7627
Fax : +028 3961 0577
Email : -
Web : www.fb.com/Umaracing.vn

TAIWAN

OOTORI RACING INTERNATIONAL CO. LTD
No. 203-6, Chao-ma Rd., Xitun Dist., Taichung City 40755, Taiwan (R.O.C)

Tel : +886 04 2359 6300
Fax : -
Email : -
Web : www.facebook.com/racingboytaiwan

PHILIPPINES

BOB'S SCOOTERS TRADING
Sitio Gipit San Jose Patag, STA Maria, Bulacan, Philippines 3022.

Tel : +63 922 841 4188
Fax : +63 917 557 0636
Email : -
Web : www.fb.com/umaracingph

MYANMAR

5 - STAR & RACING BOY CO. LTD
No 20, Yehtarna Street, Maung Ngan Kwin Quarter Mawlamyine (Township), Mon State, Myanmar.

Tel : +094 2504 1530 / +094 2526 2458
Fax : -
Email : 5star.eppk@gmail.com
Web : www.fb.com/UMA-Racing-Myanmar-Official-104013231444989

INDIA

LRL MOTORS PVT LTD
KUMBALAM, NH BYPASS KOCHI, 682506

Tel : +91 9539330000
Fax : -
Email : khais@lrlmotors.com
Web : www.lrlmotors.com

JAPAN

KN926 CO., LTD
5-31-2, Kitabefu, Nishi-ku, Kobes-shi, Hyougo, 651-2117, Japan

Tel : +81 78 224 5230
Fax : -
Email : shop@kn926.net
Web : www.fb.com/racingboyjapan

SOUTH KOREA

DEAN MOTOR TRADING
102 Bongsoo-Ro Dong-Gu Ulsan South Korea.

Tel : +82 52-251-7008
Fax : +82 52-235-8211
Email : ducati916sps@hotmail.com
Web : www.rcbkorea.modoo.at

CAMBODIA

TAKA MOTOR CO.LTD
62, ST. 310, Sangkat Toul Svay Prey 2, Khan Chomkar Morn, Phnom Penh.

Tel : +(855)78 444 144
Fax : +(855)85 852 800
Email : Guechphea55@gmail.com
Laopuychhay172826@gmail.com
Web : www.fb.com/laopuychhay

EUROPE

GREECE

MOTOTRADE MAVRIDIS
Katsimidou STR 10 Lagadas Thessaloniki 57200, Greece.

Tel : +30 23940 23669
Fax : +30 23940 20846
Email : info@mototrade.gr
Web : www.mototrade.gr/el
www.fb.com/mototrade.gr

FRANCE

XMAX CONCEPT
51 Rue Tessan Appt n°21, Résidence "Les Ombrelles", Sainte Clotilde (réunion), 97490 France.

Tel : +0692 61 59 71
Fax : -
Email : ludovall@gmail.com
Web : www.xmaxconcept.com
www.fb.com/XmaxConcept

NORTH AMERICA

BERMUDA

CARDOSO CUSTOMS & REPAIR LTD
#11, South Breakers Road Smiths, Bermuda, HS-01

Tel : +441 538 5389
Fax : +441 295 1386
Email : info@ccrpartshop.com
Web : www.ccrpartshop.com
www.fb.com/Ccrpartshop441

uma racing®

SPONSORSHIP

MotoGP™

Moto2™

PETRONAS CubPrix®
Malaysian Cub Prix Championship
www.malaysiancubprix.com

ASIA ROAD RACING CHAMPIONSHIP
www.asiaroadracing.com

MotoGP™ 2022

23

BESTIA

#23

ENEA BASTIANINI

MOTOGP RIDER

uma racing

Team GRESINI RACING MotoGP

TECHNICAL SPONSOR

49

DIGGIA

#49

FABIO DI GIANNANTONIO

MOTOGP RIDER

Moto2™ 2022

GABRI 2

#2

GABRI RODRIGO

MOTO2 RIDER

uma racing
PERTAMINA
MANDALIKA RACING TEAM INDONESIA
SAG RACING TEAM
BB 64
#64
BO BENDSNEYDER
MOTO2 RIDER
PERTAMINA
Garuda Indonesia
NHK
VOS TRUCKPARTS

ASIA ROAD RACING CHAMPIONSHIP
www.asiaroadracing.com

uma racing
OFFICIAL SPONSOR

UB 150

UMA RACING YAMAHA
MAJU MOTOR ASIA TEAM

UB 150

UMA RACING MMR
YAMAHA PHILIPPINES

PETRONAS CubPrix
AAM Malaysian Cub Prix Championship

uma racing
OFFICIAL SPONSOR

CP150

TEAM AHM
MOTORSPORT YAMAHA RACING

HONDA RCB
SOLARALERT CILIK TEAM

PETRONAS SPRINTA
YAMAHA CKJ RACING

IDEMITSU HONDA
YUZY RACING

PETRONAS SPRINTA
YAMAHA MAJU MOTOR

CP125

PETRONAS SPRINTA
YAMAHA MAJU MOTOR

TEAM AHM
MOTORSPORT YAMAHA RACING

PETRONAS SPRINTA
YAMAHA CKJ RACING

KC RACING TEAM
KC RACING

PINK RACING TEAM
TUNEBOSS PINK RACING

AFB TECH RACING TEAM
HONDA AFB TECH RACING

PAAT MOTORSPORTS TEAM
PAAT MOTORSPORTS

WIRA

ENGINE OIL

MINERAL ENGINE OIL (HP1000)

SEMI SYNTHETIC *(HP2000)*

FULL SYNTHETIC *(HP3000)*

ENGINE OIL

FEATURES:

- Prolongs engine life
- Formulated for any engine
- Keeps engine clean to maintain peak performance
- Low on maintenance with extra protection for engine components

HP1000

MINERAL ENGINE OIL

	CODE	VISCOSITY
NEW	02000250	SAE 20W - 40

HP2000

SEMI SYNTHETIC

CODE	VISCOSITY
02000180	SAE 10W - 30
02000200	SAE 10W - 40
02000210	SAE 15W - 50

CODE	VISCOSITY
02000220	SAE 10W - 40

HP3000

FULL SYNTHETIC

CODE	VISCOSITY
02000140	SAE 10W - 30
02000240	SAE 10W - 40
02000160	SAE 10W - 50

CODE	VISCOSITY
02000230	SAE 5W - 40

uma
D23
uma
D23
uma
D20
uma
D20
uma
racing

ENGINE POWER PARTS

- SUPERHEAD
- CYLINDER BLOCK
- GASKETS
- PISTONS & PARTS
- BORE UP CONNECTING ROD
- CRANKSHAFT
- OIL PUMP
- DLC ROCKER ARM SHAFT
- VALVE
- VALVE SPRING
- HIGH CAM
- CAM STOPPER
- TIMING CHAIN
- SILENT CHAIN
- GUIDE RAIL
- DEGREEE WHEEL KIT
- TIMING GEAR

SUPERHEAD

SUPERHEAD
APPLE COMBUSTION CHAMBER

FEATURES:

- Heat resistance at elevated temperature
- High strength & ductility aluminium
- Maximise air & fuel mixture flow
- Increase engine performance
- Oval shaped exhaust port

SUPERHEAD APPLE COMBUSTION CHAMBER

Y15ZR

O2 Sensor Port

Oval Shaped Port

Apple Shaped Combustion Chamber

FULL KIT

CODE	VALVE SIZE
02H00290	IN 23 / EX 20
02H00300	IN 25 / EX 22

REPLACEMENT KIT (HEAD & VALVE ONLY)

CODE	VALVE SIZE
02H00380	IN 25 / EX 22

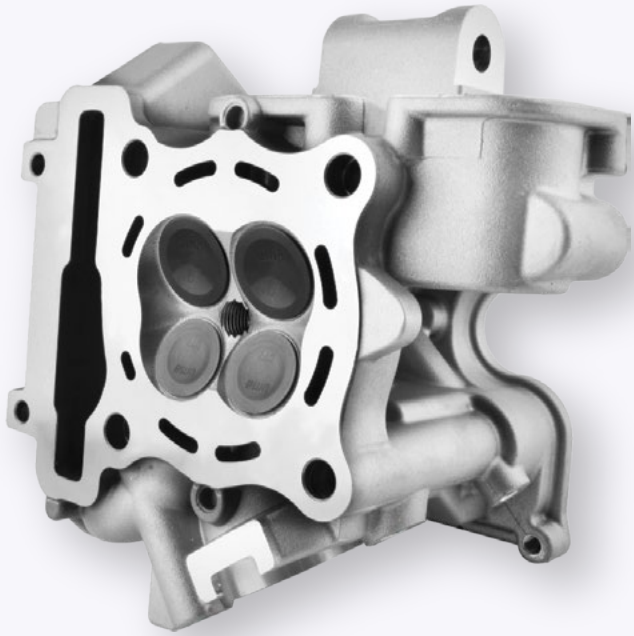

SUPERHEAD

FZ150I / LC4S / LC5S

FULL KIT

CODE	VALVE SIZE
02H00070	IN 23 / EX 20
02H00180	IN 25 / EX 22

REPLACEMENT KIT (HEAD & VALVE ONLY)

CODE	VALVE SIZE
02H00170	IN 25 / EX 22

SUPERHEAD PARTS

R1 HIGH CAM

CODE	MODEL
02HC0010	FZ150I / LC4S / LC5S

ROCKER ARM

CODE	MODEL
02H00090	FZ150I / LC4S / LC5S

VALVE SPRING K2

CODE	MODEL
02V00430	Y15ZR

VALVES

CODE	SIZE	MODEL
02H00240	IN 25 / EX 22	FZ150I / LC4S / LC5S
02H00100	IN 23 / EX 20	FZ150I / LC4S / LC5S
02H00390	IN 25 / EX 22	Y15ZR (SUPERHEAD USE)

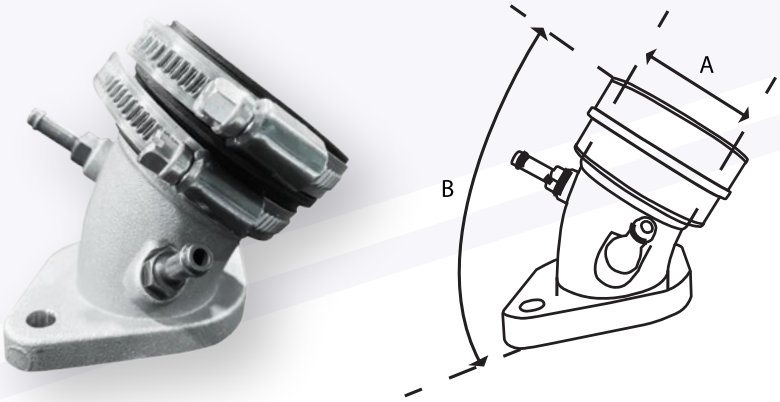

INTAKE

CODE	MODEL	A	B
02I00140	FZ150I / LC4S / LC5S	28MM	90°
02I00150	FZ150I / LC4S / LC5S	30MM	90°
02I00160	FZ150I / LC4S / LC5S	32MM	90°
02I00170	FZ150I / LC4S / LC5S	34MM	90°

CYLINDER BLOCK

YAMAHA

CERAMIC CYLINDER BLOCK WITH SUPERHEAD COMPATIBLE PISTON

Y15ZR

SUPERHEAD
APPLE COMBUSTION CHAMBER

- High performance engine enhancement
- Better tensile strength & durability
- Stable & reliable in performance
- Tough wear-resistant surface
- Superior heat dissipation

CODE	SIZE
02B00630	62MM
02B00640	65MM

LONG SLEEVED CERAMIC CYLINDER BLOCK

Y15ZR

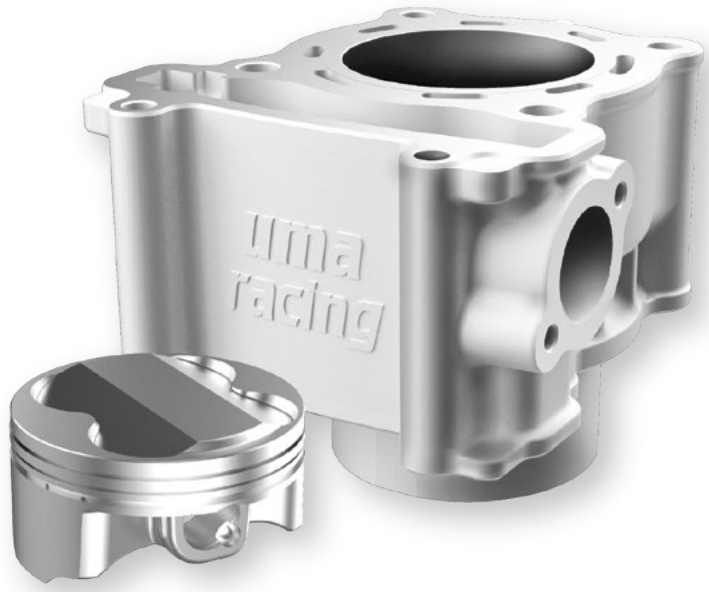

- Suitable for increased engine displacement
- Able to withstand extreme pressure
- Better tensile strength & durability
- Enhanced engine reinforcement
- Stable & reliable performance

LONG STROKE

CODE	SIZE
02B00600	62MM
02B00610	65MM

OPEN WATER JACKET CYLINDER BLOCK

Y15ZR

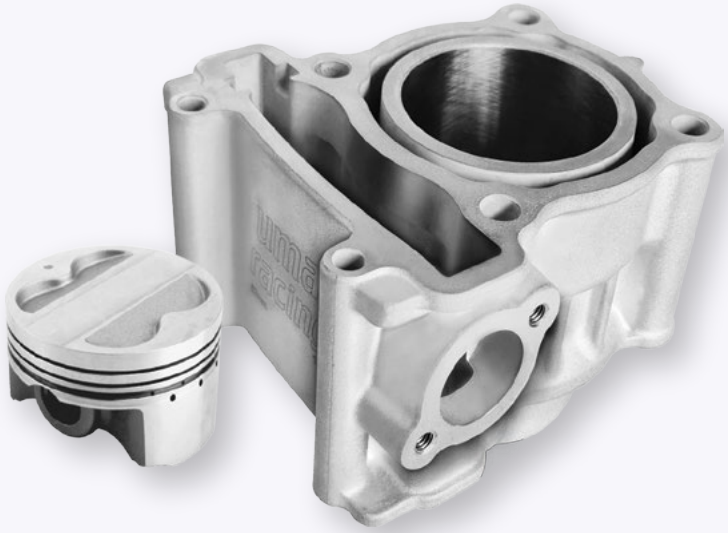

- Better tensile strength & durability
- Stable & reliable performance
- Tough wear-resistant surface
- Great increase in engine life
- Superior heat dissipation
- Enhanced water jacket

ENHANCED COOLING

CODE	SIZE
02B00520	62MM

XPRO CERAMIC CYLINDER BLOCK

Y15ZR

- Extreme compression
- Reinforced structure
- Increased power
- Ultimate tuning

XPRO EXTREME COMPRESSION

CODE	SIZE
02B00550	62MM
02B00560	65MM

CERAMIC CYLINDER BLOCK

Y15ZR

- Ceramic coated for tough wear resistance
- High tensile strength & durability
- Increase horsepower & torque
- Stable & reliable performance

CODE	SIZE
02B00370	57MM HIGH COMPRESSION
02B00350	62MM
02B00360	65MM

CERAMIC CYLINDER BLOCK

LC135

- High tensile strength & durability
- Stable & reliable performance
- Aluminium cylinder body
- Ceramic coated bore
- Piston kit included

CODE	SIZE
02B00170	62MM
02B00240	65MM
02B00180	62MM SUPERHEAD PISTON
02B00260	65MM SUPERHEAD PISTON

CERAMIC CYLINDER BLOCK

NMAX / NVX / R15V3 / Y16ZR

- Ceramic coated for tough wear resistance
- High tensile strength & durability
- Increase horsepower & torque
- Stable & reliable performance

CODE	SIZE
02B00580	63MM

XPRO EXTREME COMPRESSION

CODE	SIZE
02B00590	63MM

COMPOSITE CYLINDER BLOCK NEW

NMAX / NVX / R15V3 / Y16ZR

- Cast iron liner
- Enhanced water jacket
- Superior cooling performance
- High pressure aluminium body

	CODE	SIZE
NEW	02B00710	63MM

YAMAHA

COMPOSITE CYLINDER BLOCK NEW

Y15ZR

- Cast iron liner
- Enhanced water jacket
- Superior cooling performance
- High pressure aluminium body

	CODE	SIZE
NEW	02B00700	63MM

CERAMIC CYLINDER BLOCK

RS150R

- High performance engine enhancement
- Better tensile strength & durability
- Stable & reliable in performance
- Tough wear-resistant surface
- Superior heat dissipation

Reinforced rib

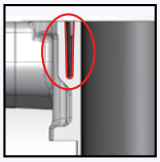

Enhanced water jacket

CODE	SIZE
02B00540	62MM

CERAMIC CYLINDER BLOCK

EX5 / EX5 DREAM

- Ceramic coated for tough wear resistance
- High tensile strength & durability
- Increase horsepower & torque
- Stable & reliable performance
- Enhanced cooling

CODE	SIZE
02B00200	53MM

COMPOSITE CYLINDER BLOCK NEW

EX5

- Cast iron liner
- Enhanced water jacket
- Superior cooling performance
- High pressure aluminium body

	CODE	SIZE
NEW	02B00720	53MM

CERAMIC CYLINDER BLOCK

BELANG150

- Enhance high performance engines
- Better tensile strength & durability
- Stable & reliable performance
- Tough wear-resistant surface
- Great increase in engine life
- Superior heat dissipation

CODE	SIZE
02B00340	68MM STANDARD PISTON
02B00380	68MM HIGH COMPRESSION

CERAMIC CYLINDER BLOCK WITH HEAD

KR150

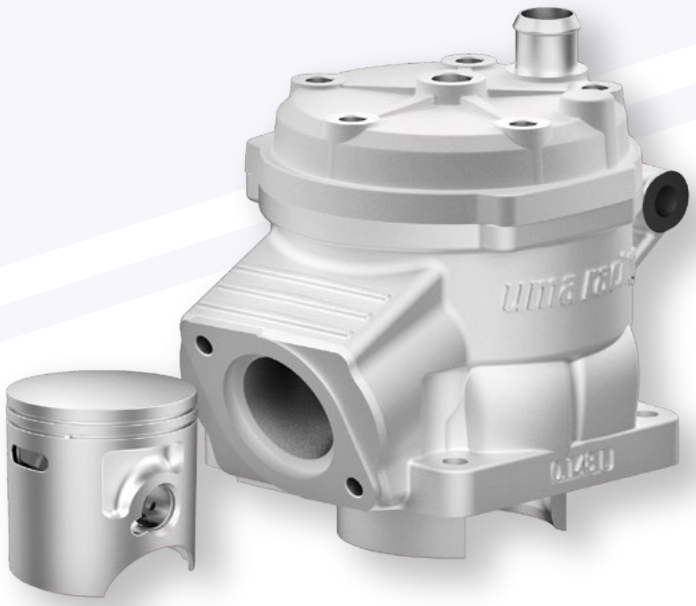

- High tensile strength & durability
- Increase horsepower & torque
- Tough wear-resistant surface
- Superior heat dissipation
- Displacement upgrade

CODE	SIZE
02B00730	65MM

GASKETS

ALUMINIUM CYLINDER GASKET

LC135

CODE	THICKNESS
02G00230	0.2MM
02G00240	0.3MM
02G00250	0.4MM
02G00260	0.5MM

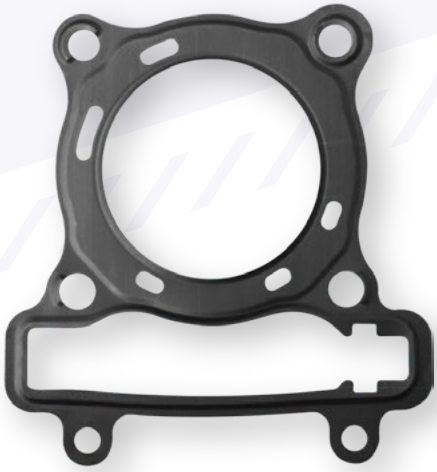

ALUMINIUM CYLINDER HEAD GASKET

LC135

CODE
02G00010

CYLINDER HEAD REPAIR GASKET

LC135 / FZ150I

CODE	TOP SIZE
02G00110	62MM
02G00200	65MM

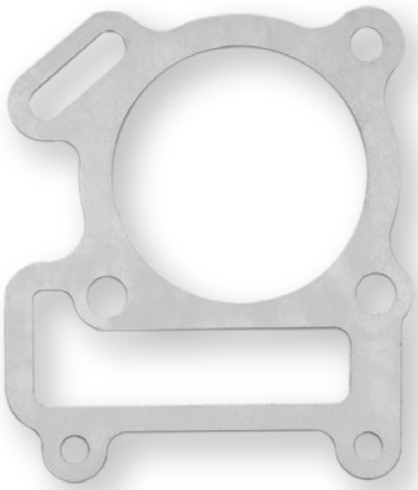

ALUMINIUM BASE GASKET

CODE	MODEL	THICKNESS
02G00020	SRL110	0.2MM
02G00040	SRL110	0.3MM
02G00060	SRL110	0.4MM
02G00080	SRL110	0.5MM
02G00030	W110	0.2MM
02G00050	W110	0.3MM
02G00070	W110	0.4MM
02G00090	W110	0.5MM

PISTON

RACING PISTON WITH RING

CODE	MODEL	SIZE
02P00510	SRL	52MM - R23/20V
02P00520	SRL	52MM - R27/23V
02P00530	SRL	55MM - R23/20V
02P00540	SRL	55MM - R27/23V

CODE	MODEL	SIZE
02P00120	EX5	51MM
02P00140	SRL	52MM
02P00130	SRL	52MM - R
02P00150	SRL	52MM - S
02P00160	SRL	53
02P00170	SRL	54 - R
02P00180	SRL	55MM - R23/20V
02P00190	SRL	55MM - R27/23V

RACING FORGED PISTON WITH MACHINING

CODE	MODEL	SIZE
02F00040	W110	51.25MM
02F00060	W110	54.5MM
02F00180	SRL110	52MM
02F00200	SRL110	55.25MM
02F00230	LC135	57MM
02F00310	LC135 (SUPERHEAD USE)	57MM
02F00100	LC135	62MM
02F00110	LC135 (STANDARD HEAD)	62MM
02F00120	LC135 (SUPERHEAD USE)	62MM
02F00240	LC135 (STANDARD HEAD)	65MM
02F00250	LC135 (SUPERHEAD USE)	65MM
02F00350	Y15ZR	57MM
02F00450	LC135 / Y15ZR (XPRO)	65MM
02F00440	Y125Z (CAST PISTON)	62MM
02F00380	RS150R	57.3MM

RACING FORGED PISTON WITHOUT MACHINING

CODE	MODEL	SIZE
02F00050	W110	51.25MM
02F00070	W110	54.5MM
02F00190	SRL110	52MM
02F00210	SRL110	55.25MM
02F00380	RS150R	57.3MM
02F00480	Y15ZR FLATHEAD (CLIP & PIN ONLY)	57MM
02F00490	YAMAHA / HONDA (UNSHAVED)	53.4MM

PISTON RINGS

CODE	MODEL	SIZE
02P00080	LC135	62MM
02P00090	W110 / 115	51.25MM
02P00100	W110 / 115	54.5MM
02P00110	SRL	55MM
02P00790	EX5	53MM
02P00800	W110	54MM
02P00810	EGO	58.5MM
02P00830	SRL (FG2)	55.25MM
02P00840	SRL	52MM
02P00850	Y15ZR	65MM

DLC PISTON PIN

- Diamond Like Carbon coating
- Improve durability
- Abrasion resistant
- Low friction

CODE	SIZE
02PB0010	14 X 41MM
02PB0020	14 X 44MM

PISTON PIN

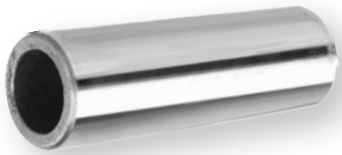

CODE	MODEL
02P00070	LC135

CONNECTING ROD

- Heavy duty connecting rod
- PEEK coated bearing retainer
- Sub-zero treated crankpin
- Built to withstand high stress

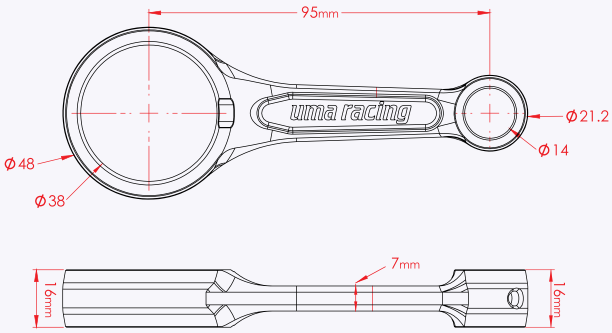

FULL KIT

CODE	MODEL
02B00660	RS150R

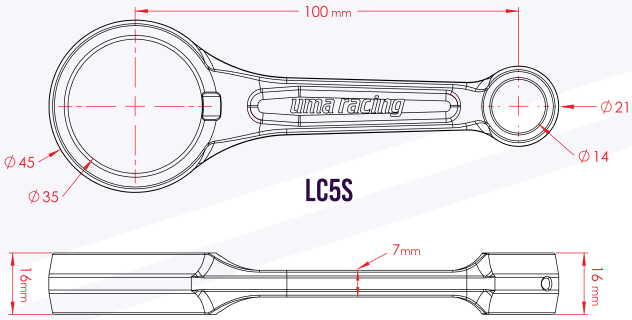

LC5S

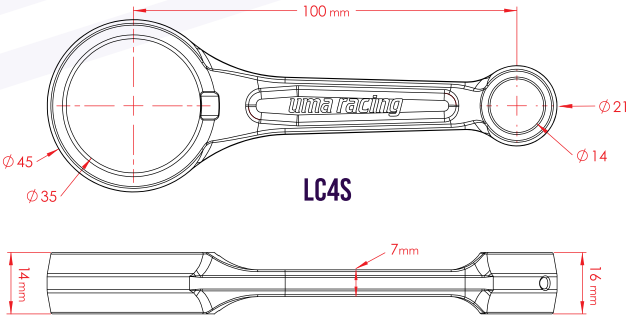

LC4S

FULL KIT

CODE	MODEL
02B00410	LC4S
02B00450	LC5S

SPARE BEARINGS

CODE	MODEL
02B00490	LC4S
02B00500	LC5S

CRANKSHAFT

- Improves power
- Extended stoke
- Greater low range torque
- Increased engine displacement

CODE	MODEL	SIZE
02CS0010	Y15ZR	58.7MM
02CS0020	Y15ZR	62MM
02CS0030	Y15ZR	65.5MM

CRANKSHAFT DATA

SIZE	58.7MM	62MM	65.5MM
STROKE TOTAL OFFSET	-	3.3MM	6.8MM
ROD LENGTH	100MM	104MM	109MM
CRANK PIN DIAMETER	28MM	26MM	26MM
MAIN BEARING DIAMETER	25MM	25MM	25MM
CHAIN LINK	96L	98L	100L

02CS0010

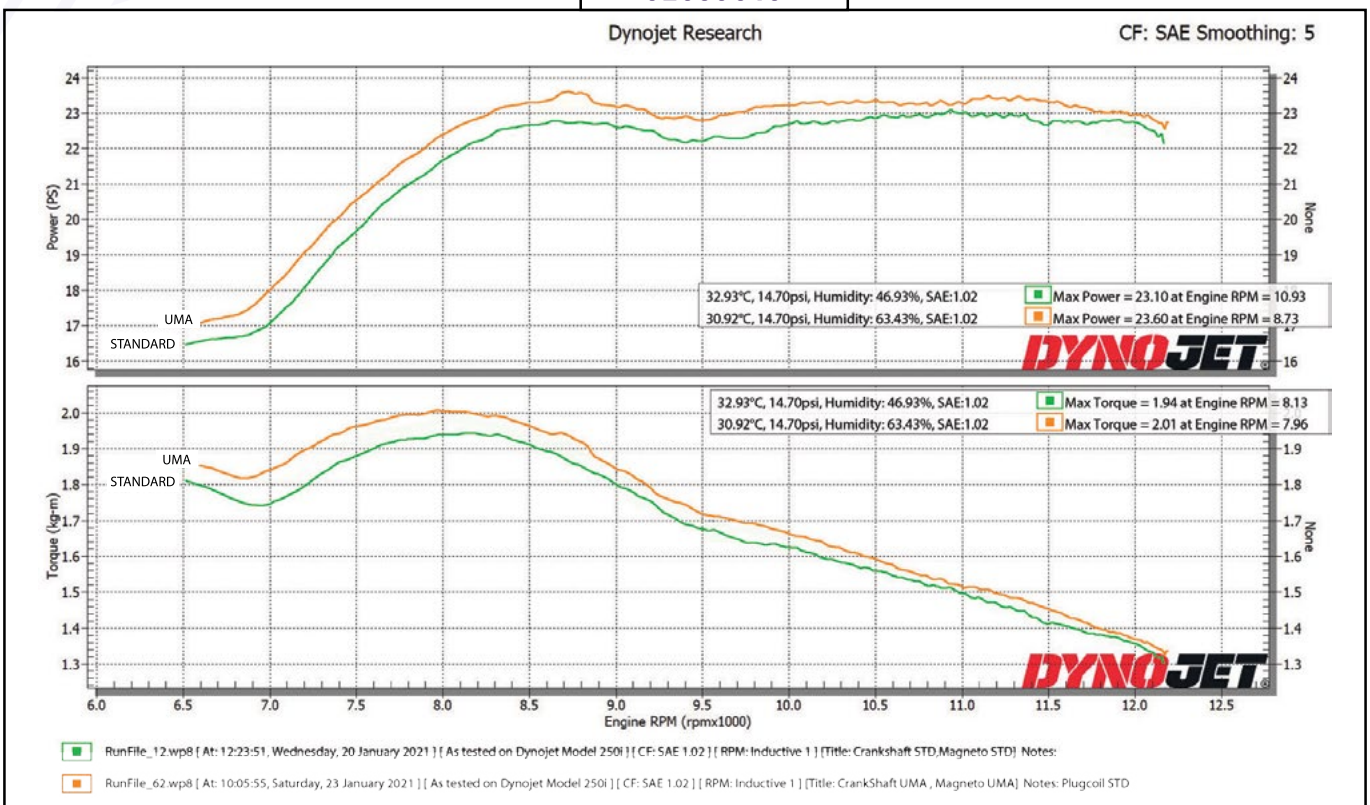

NOTE Piston = 57mm Crankshaft = 58 7mm Camshaft = R3 Valve Size: 22/19

02CS0020

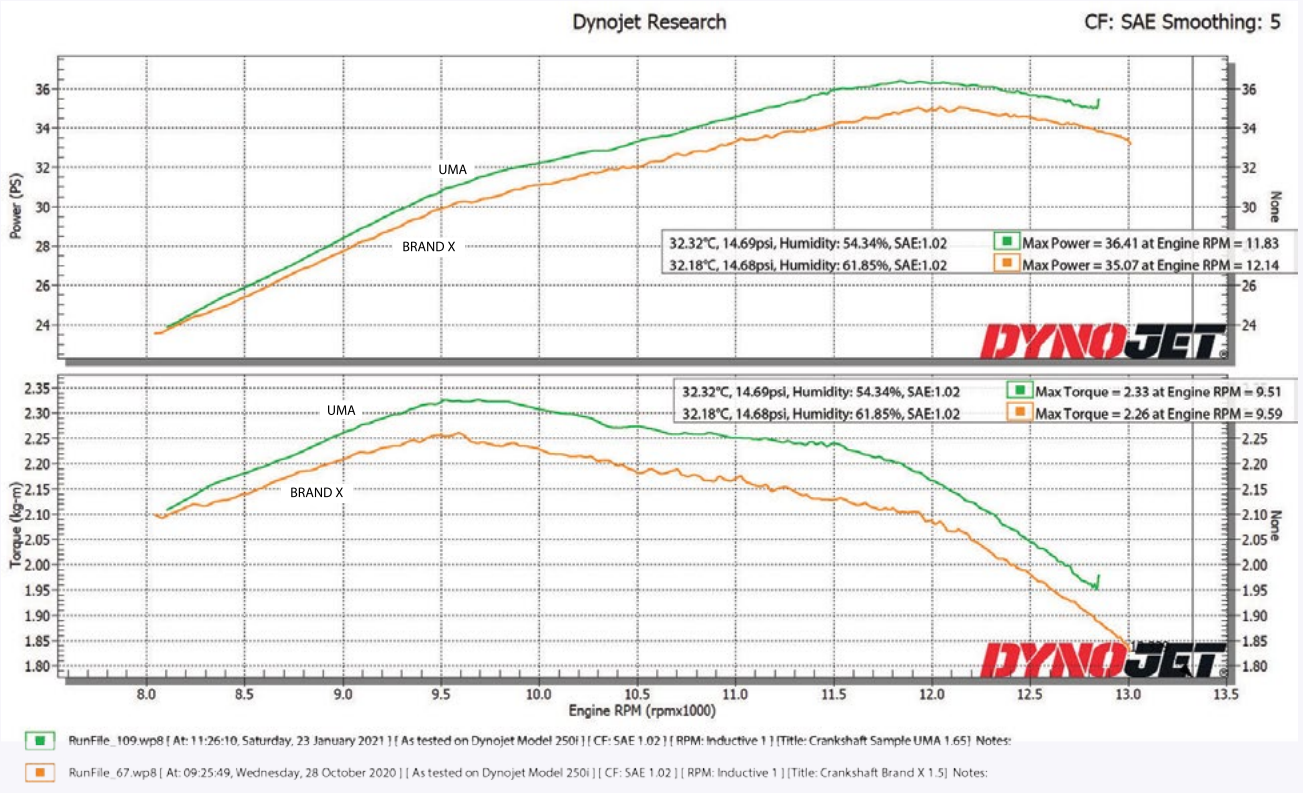

NOTE Piston = 62mm Valve Size = 25/22 Camshaft = R4

02CS0030

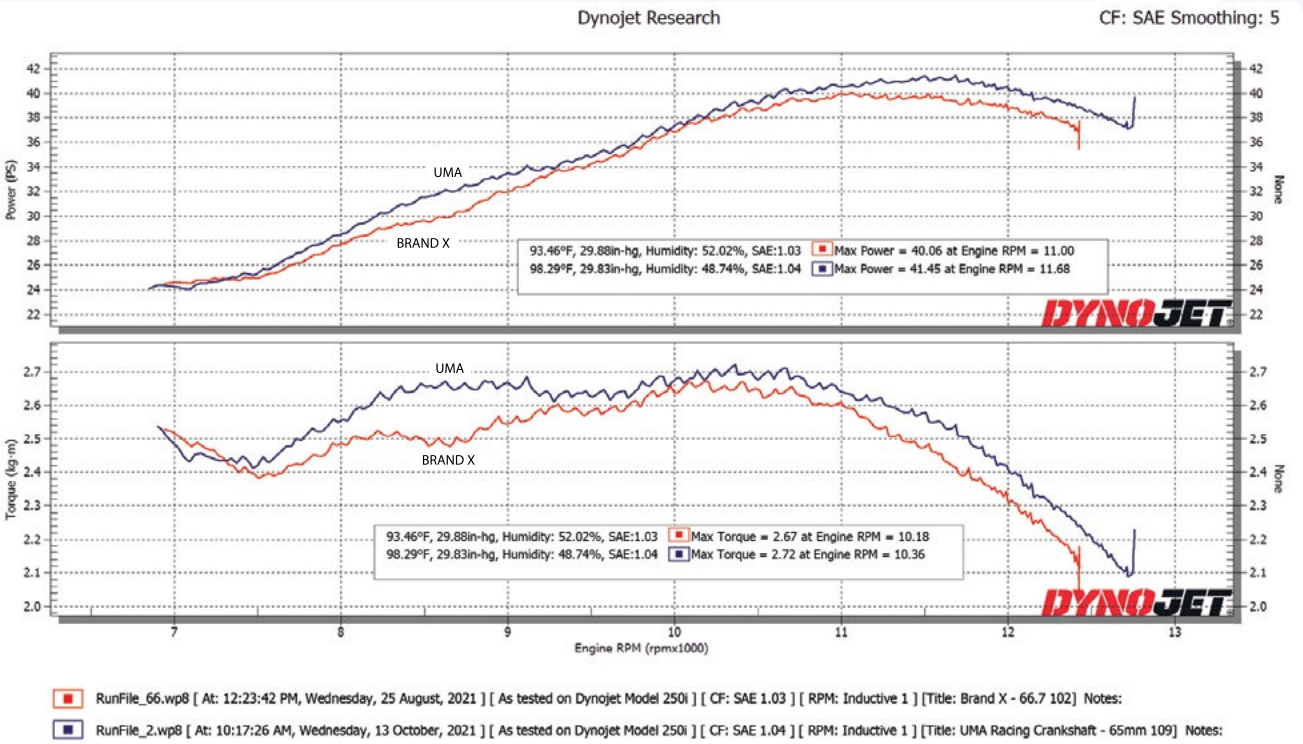

NOTE Piston = 65mm Valve Size= 25/22 Camshaft = R5

OIL PUMP

- Greater flow rate
- High volume pump
- Superior performance
- High pressure for essential engine needs

CODE	MODEL
02000100	Y15ZR
02000120	Y15ZR (V2) / Y16ZR

CODE	MODEL
02000020	SRL110

CODE	MODEL
02000040	LC135

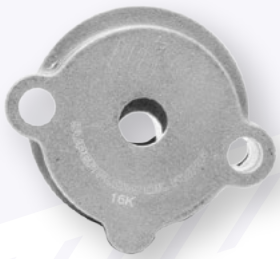

CODE	MODEL
02000080	LC5S

CODE	MODEL
02000050	EG0

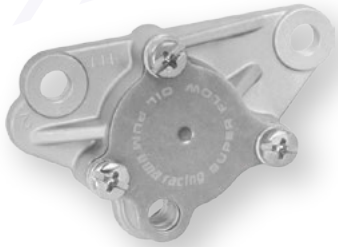

CODE	MODEL
02000030	EX5

CODE	MODEL
02000110	RS150R

DLC ROCKER ARM SHAFT NEW

- Diamond Like Carbon coating
- Improve durability
- Abrasion resistant
- Low friction

	CODE	MODEL
NEW	02RS0001	Y15ZR / LC135
NEW	02RS0002	RS150R
NEW	02RS0003	NMAX / R15
NEW	02RS0004	VARIO150 / PCX

VALVE

VALVE SET (INTAKE & EXHAUST)

CODE	MODEL	SIZE (IN / EX)
02V00030	SRL	27 / 23
02V00040	SRL - V2	27 / 23
02V00050	SRL - V2	28 / 23
02V00060	SMASH PRO	27 / 23
02V00070	SHOGUN110	28 / 24
02V00080	SMASH PRO V2	27 / 23
02V00090	KRISS	24 / 21
02V00100	SRL110-5TN	23 / 20
02V00110	SRL110-5TN	28 / 24
02V00310	LC135	22 / 19
02V00390	RS150R	24 / 21
02V00400	RS150R	22 / 19
02V00440	NMAX	22 / 19
02V00480	DASH	26 / 21

- Valve neck & base made from Stellite® alloy for strength & durability
- Superior flow of air & fuel mixture

VALVE (INTAKE)

CODE	MODEL	SIZE (IN)
02V00170	SRL / SRLZ	28
02V00180	SRL / SRLZ	29
02V00190	W110	27
02V00200	W110	28
02V00210	W110	29
02V00300	SRL	26

VALVE (EXHAUST)

CODE	MODEL	SIZE (EX)
02V00120	SRL / SRLZ	23
02V00130	SRL / SRLZ	24
02V00140	W110	23
02V00150	W110	24
02V00170	SRL / SRLZ	28

TITANIUM VALVE STEM BASE

CODE	MODEL
02V00230	EX5

VALVE SPRING

- Improve valve control
- Supports high cam lift
- Durable & reliable
- Precision engineered from best materials

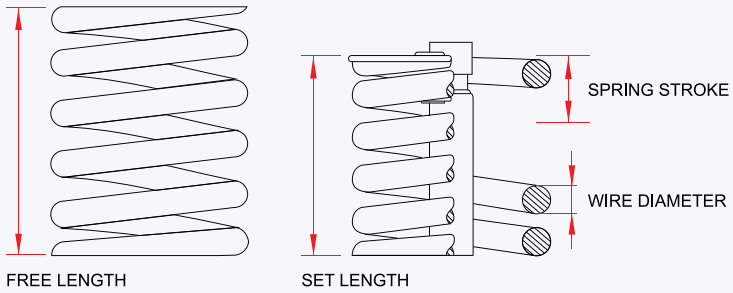

CODE	MODEL	WIRE DIAMETER	FREE LENGTH	SET LENGTH	SPRING STROKE
02V00320	BELANG	2.9MM	38.5MM	33.6MM	8.5MM
02V00410	LC135 (K2)	3.0MM	47.5MM	36MM	11MM
02V00430	Y15ZR (K2)	3.2MM	38.3MM	32.3MM	8.8MM
02V00460	RS150R (K2)	3.3MM	38.4MM	32.7MM	9MM
02V00500	VF3I	3MM	40.2MM	26.5MM	10MM

SAMURAI VALVE SPRING

CODE	MODEL	WIRE DIAMETER	FREE LENGTH	SET LENGTH	SPRING STROKE
02V00250	LC135	3.2MM	31.5MM	26.5 - 27.5MM	9.5MM

VALVE SPRING

CODE	MODEL
02V00220	SRL
02V00280	EX5
02V00290	SRL
02V00490	HONDA / YAMAHA
02V00210	W110
02V00300	SRL

HIGH CAM

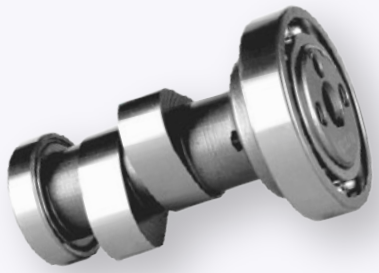

EX5

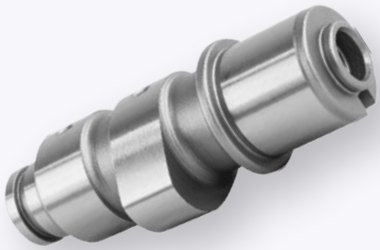

EGO

SRL

W110

DASH110

LC135 / Y15ZR / FZ150i

NMAX

	CODE	MODEL	INTAKE	EXHAUST
	02HC0040	(S1) LC135 / Y15ZR / FZ150I	7.5MM	7.52MM
	02HC0010	(R1) LC135 / Y15ZR / FZ150I	7.71MM	7.85MM
	02HC0030	(R3) LC135 / Y15ZR / FZ150I	8.64MM	8.82MM
	02HC0050	(R4) LC135 / Y15ZR / FZ150I	9.60MM	9.37MM
NEW	02HC0060	(R5) LC135 / Y15ZR / FZ150I	9.32MM	9.26MM
NEW	02HC0070	(R8) LC135 / Y15ZR / FZ150I	9.42MM	9.38MM

BELANG

SRL115i

SMASH PRO

DASH125i

WAVE125 KIT

EX5 ROLLER ACTIVE
WITH ROCKER ARM

CODE	MODEL	INTAKE	EXHAUST
02H00010	BELANG	7.4MM	6.5MM
02H00020	EGO	5.9MM	5.9MM
02H00030	EX5	6.8MM	6.4MM
02H00050	SMASH PRO	5.8MM	5.5MM
02H00060	SRL	5.9MM	5.8MM
02H00110	W110 (W/O ROCKERARM)	5.0MM	4.5MM
02H00120	EX5 (WITH ROCKER ARM)	6.8MM	6.4MM
02H00140	DASH125I / MSX125	5.04MM	4.92MM
02H00200	SRL115I	4.6MM	4.0MM
02H00210	DASH110	5.0MM	4.5MM
02H00270	(R1) BELANG	7.5MM	7.3MM
02H00310	WAVE125 (240°KIT)	7.25MM	6.83MM
02H00320	WAVE125 (260°KIT)	8.37MM	7.9MM
02H00330	NMAX	L: 6.22MM H: 7.7MM	6.0MM

CAM STOPPER

- Developed to withstand high RPM
- Made from stainless steel
- Outstanding duarability
- Increased rigidity

CODE	MODEL
02H00340	LC135 / FZ150I / Y15ZR

TIMING CHAIN NEW

- Corrosion resistant
- Increased wear resistance
- Improves chain and sprocket engagement

	CODE	MODEL	LENGTH
NEW	02CH0008	HONDA EX5 FI DASH / WAVE110	90L
NEW	02CH0009	HONDA WAVE125I W100 / EX5DREAM FUTURE125	88L

SILENT CHAIN

- Minimal chain noise
- Smooth operation
- Supreme durablility

	CODE	MODEL	LENGTH
	02CH0003	LC135 / Y15ZR	96L
	02CH0004	LC135 / Y15ZR	98L
NEW	02CH0005	RS150	120L
NEW	02CH0006	RS150 (3*4)	122L
NEW	02CH0007	SRL115 / EGO NOUVO S (2*3)	90L
NEW	02CH0010	R15/Y16	96L

TIMING CHAIN GUIDE RAIL NEW

- Made for use with UMA Racing crankshafts
- Guide rail for engine with increased stroke
- Reduce rattling and chain wear

	CODE	MODEL	LENGTH AND COMPATABILITY
NEW	02T00710	Y15ZR	+6MM (UMA CRANKSHAFT 62MM)

DEGREE WHEEL KIT

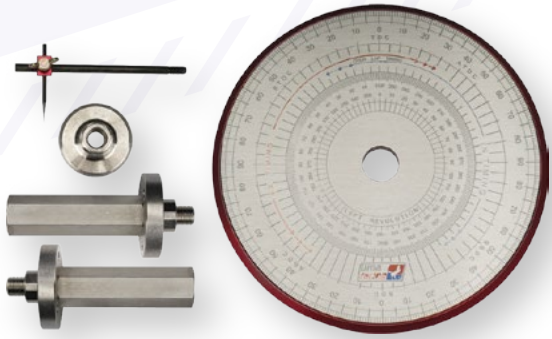

- Ensures precise alignment & centering of component in the crankshaft
- Calculates camshaft duration, valve lift & cam lobe center
- Made from heavy gauge metal for long lasting use

CODE
02I00190

TIMING GEAR

- Able to withstand high load
- Designed for increased rigidity & stability
- Secured fitting

Fine-tuning indicator to ensure precise adjustments to enhance efficiency & durability

CODE	MODEL
02T00630	SRL115I

CODE	MODEL
02T00010	EX5

CODE	MODEL
02T00020	LC135 / FZ150I

ADJUSTABLE TIMING GEAR

- Able to withstand high load
- Designed for increased rigidity & stability
- Secured fitting

CODE	MODEL
02T00030	SRL

CODE	MODEL
02T00040	W110

CODE	MODEL
02T00610	WAVE DASH

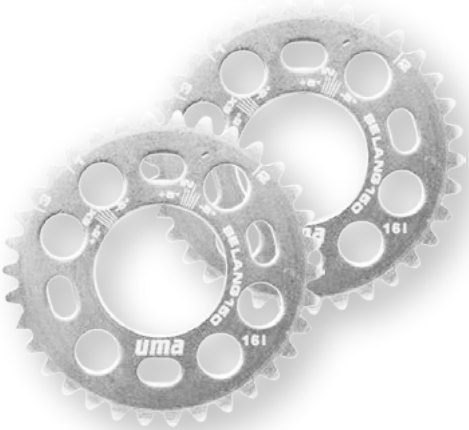

CODE	MODEL
02T00650	BELANG

FUEL SYSTEM

CARBURETOR

CARBURETOR ACCESSORIES

FUEL PUMP

INTAKE

AIR FILTER KIT

AIR FILTER

AIR FUNNEL

THROTTLE BODY

FUEL INJECTOR

AIR FILTER KIT

AIR FILTER DUAL KIT

- Dual-layered filters
- Bigger surface area
- Increase airflow
- Washable & replaceable filters

CODE	MODEL
02A00270	R15V3 / MT15

CODE	MODEL
02A00160	LC135

CODE	MODEL
02A00220	BELANG

CODE	MODEL
02A00170	Y15ZR / Y16ZR

CODE	MODEL
02A00210	FZ150I

CODE	MODEL
02A00180	RS150R

CODE	MODEL
02A00190	NMAX

	CODE	MODEL
NEW	02A00300	SYM VF3I

AIR FILTER KIT

- Single layer filter
- Bigger surface area
- Increase airflow
- Washable & replaceable filters

CODE	MODEL
02A00240	PCX150

CODE	MODEL
02A00200	EGO

CODE	MODEL
02A00230	NVX155

CODE	MODEL
02A00280	XMAX (INTAKE)

CODE	MODEL
02A00290	XMAX (CRANKCASE)

REPLACEMENT FILTER (10PCS/SET)

CODE	MODEL
02A00250	Y15ZR / Y16ZR

CODE	MODEL
02A00260	RS150R

THROTTLE BODY

THROTTLE BODY KIT

Y15ZR

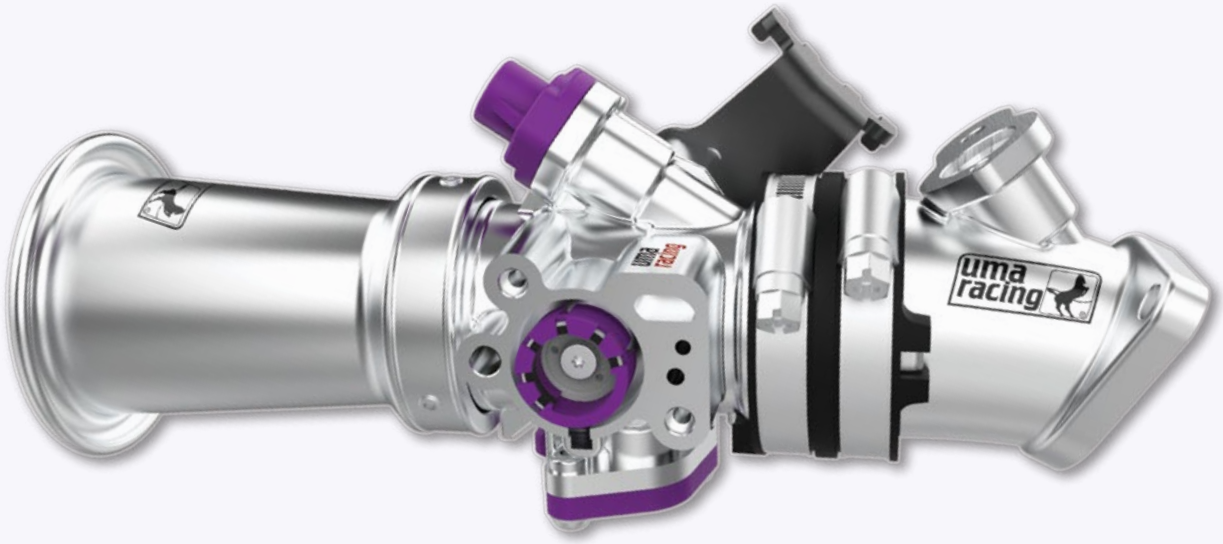

- Clean & stylish
- Variable tuning options
- Dual injector for maximum performance
- Interchangeable intake manifold (long or short)

	CODE	SIZE
	02TB0001	32MM
	02TB0002	34MM
NEW	02TB0003	36MM
NEW	02TB0004	38MM
NEW	02TB0005	40MM
NEW	02TB0006	42MM

THROTTLE BODY KIT PARTS

INTAKE MANIFOLD ROUND (SHORT)

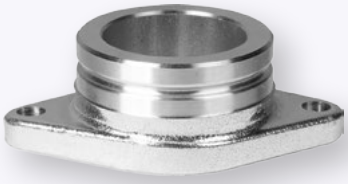

- Improves throttle response
- Compact structure
- Smoother airflow

	CODE	SIZE
	02IT0010	32MM
	02IT0020	34MM
NEW	02IT0030	36MM
NEW	02IT0040	38MM
NEW	02IT0050	40MM
NEW	02IT0060	42MM

INJECTOR PIPE HOLDER

- Improves injection consistency
- Optimised fuel flow
- Easy installation

CODE
02IP0010

THROTTLE POSITION SENSOR (TPS)

- Higher resolution for ECU tuning
- High accuracy of TPS angle
- For modified throttle body
- Quicker response

CODE	MODEL
02T00660	Y15ZR / FZ150I / R15
02T00700	RS150R

FUEL PUMP

FUEL PUMP 4.0 BAR

- Suitable for standard and bored up engine
- Consistent pressure for higher loads
- Maximise power output
- High flow capability

CODE	MODEL
02F00530	Y15ZR / Y16ZR

FUEL INJECTOR (4 HOLE)

- Consistent fuel delivery & distribution
- Precise fuel volume spray per minute (CC)
- Increase pressure for optimal combustion

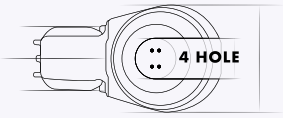

CODE	MODEL	TYPE
02AR0101	YAMAHA	160 CC
02AR0102	YAMAHA	240 CC
02AR0103	YAMAHA	320 CC

FUEL INJECTOR

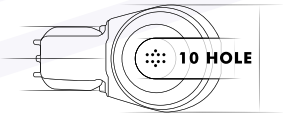

CODE	MODEL	TYPE
02F00150	FZ150I	140 CC
02F00160	FZ150I	160 CC
02F00260	YAMAHA / Y15ZR V1	160 CC (NEW)
02F00370	YAMAHA / Y15ZR V1	240 CC (NEW)
02F00460	YAMAHA / Y15ZR V2	160 CC (B)
02F00470	YAMAHA / Y15ZR V2	240 CC (B)
NEW 02AR0125	Y15ZR	280 CC

V1 TO V2 INJECTOR HARNESS

CODE
02AR0104

AIR FILTER

45°

CODE	SIZE
02A00030	45MM

90°

CODE	SIZE
02A00060	38MM
02A00070	45MM

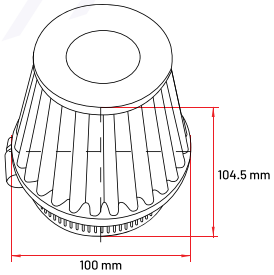

PRO - 1

CODE	SIZE
02A00090	35MM
02A00100	38MM
02A00110	48MM

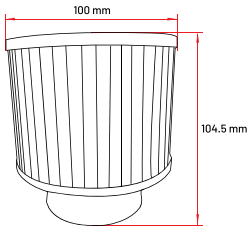

MAX FLOW

CODE	MODEL	SIZE
02A00130	LC135	50MM
02A00140	LC135	55MM

AIR FUNNEL

50mm

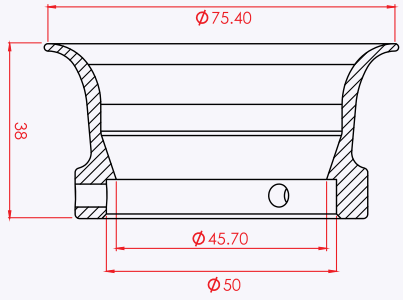

55mm

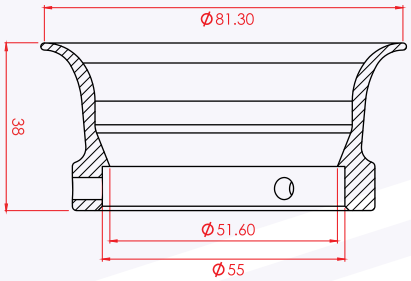

AIR FUNNEL

CODE	MODEL	SIZE
02AF0001	BLUE	50MM
02AF0002	RED	50MM
02AF0004	BLUE	55MM
02AF0005	RED	55MM

CARBURETOR

VR CARBURETOR

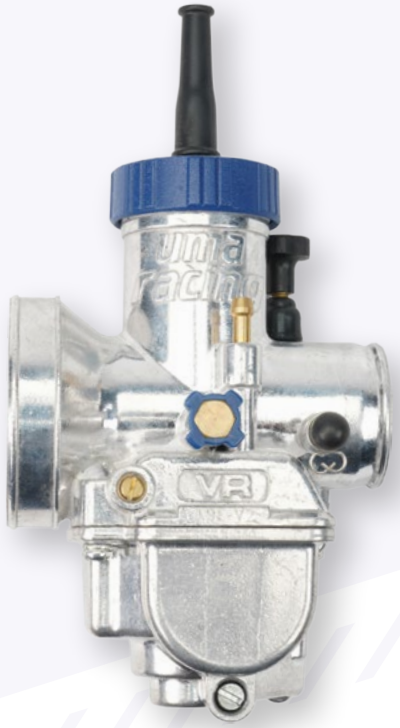

FEATURES:

- Enhanced finishing
- High volume intake
- Ease of tuning
- Fuel efficient

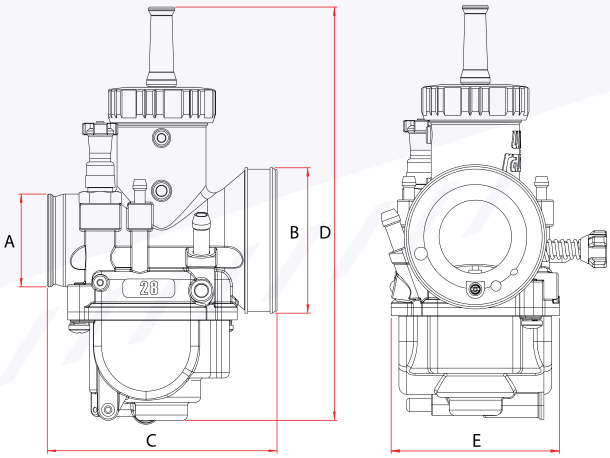

CODE	TYPE	SIZE	A	B	C	D	E
02C01020	4T - UNIVERSAL	28MM	35	55	88	150.9	65

PWK CARBURETOR V2 NEW

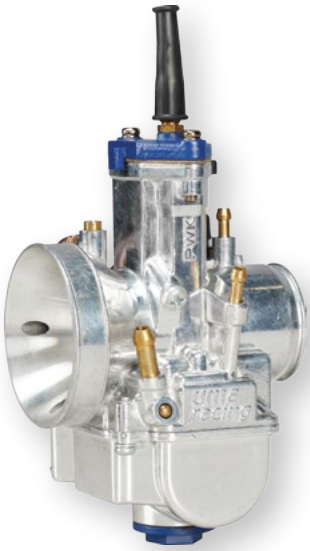

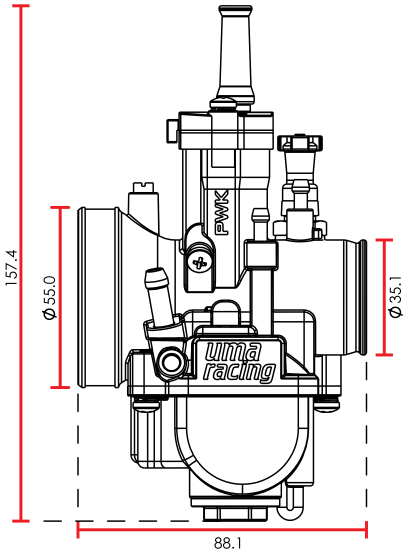

- Consistent fuel delivery & distribution
- Flat-D slide for improved throttle response
- Increase pressure for optimal combustion

	CODE	TYPE & MODEL	SIZE
NEW	02CA0010	4T - UNIVERSAL	24MM
NEW	02CA0020	4T - UNIVERSAL	28MM
NEW	02CA0030	4T - UNIVERSAL	30MM
NEW	02CA0040	4T - UNIVERSAL	32MM

CARBURETOR PARTS

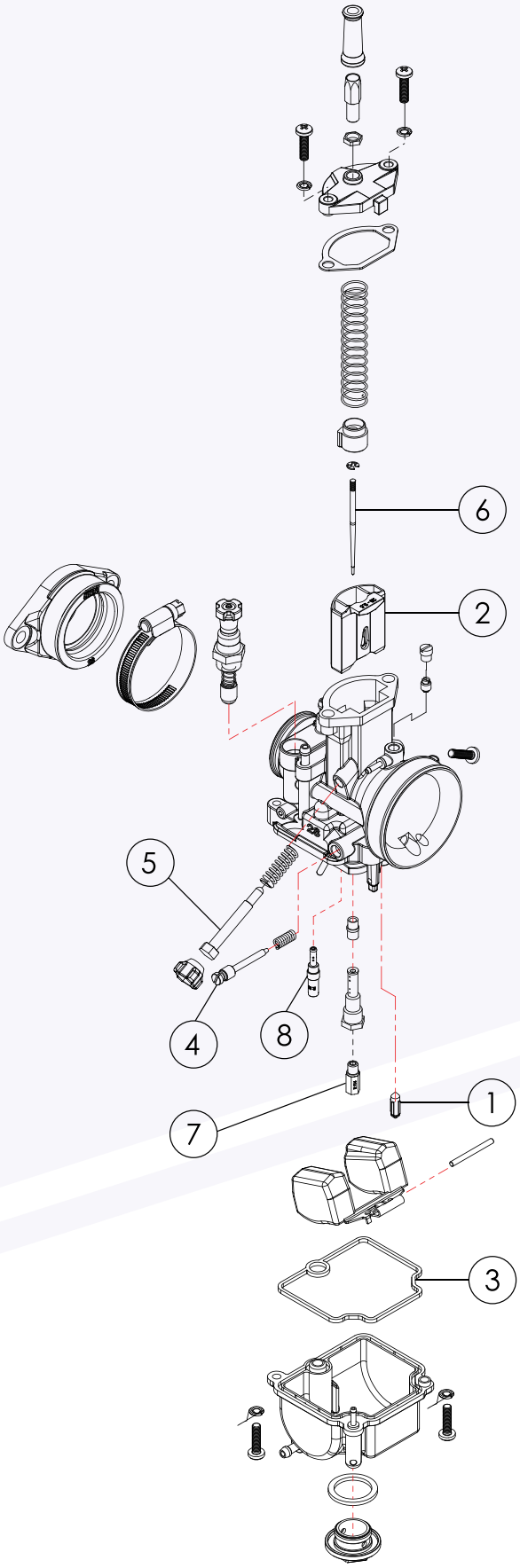

S/NO	DESCRIPTION	CODE
1	FLOAT VALVE	02F00140
2	THROTTLE VALVE SET (3PCS)	
	24MM - (3.0MM)	02T00340
	28MM - (3.0MM)	02T00350
	30MM - (3.0MM)	02T00360
	32MM - (3.0MM)	02T00370
	34MM - (3.0MM)	02T00380
	24MM - (3.5MM)	02T00170
	28MM - (3.5MM)	02T00180
	24MM - (4.0MM)	02T00190
	28MM - (4.0MM)	02T00200
	30MM - (4.0MM)	02T00210
	32MM - (4.0MM)	02T00220
	34MM - (4.0MM)	02T00230
	24MM - (4.5MM)	02T00240
	28MM - (4.5MM)	02T00250
	30MM - (4.5MM)	02T00260
	32MM - (4.5MM)	02T00270
	34MM - (4.5MM)	02T00280
	24MM - (5.0MM)	02T00290
	28MM - (5.0MM)	02T00300
	30MM - (5.0MM)	02T00310
	32MM - (5.0MM)	02T00320
	34MM - (5.0MM)	02T00330
3	REPLACEMENT OIL SEAL	
	21 - 28MM	02000010
	30 - 34MM	02000070
	BASE O - RING	02000060
4	AIR SCREW	02A00120
5	IDLE SCREW	02I00120
6	JET NEEDLE	
	N68E (2T)	02N00010
	N68J (4T)	02N00020
	N68K (4T)	02N00030
	N68L (4T)	02N00040
	N68M (4T)	02N00050
	N68N (4T)	02N00060
	VR 28MM (4T)	02N00070
7	MAIN JET	REFER NEXT PAGE
8	PILOT JET	REFER NEXT PAGE

MAIN JET 5 PIECE KIT

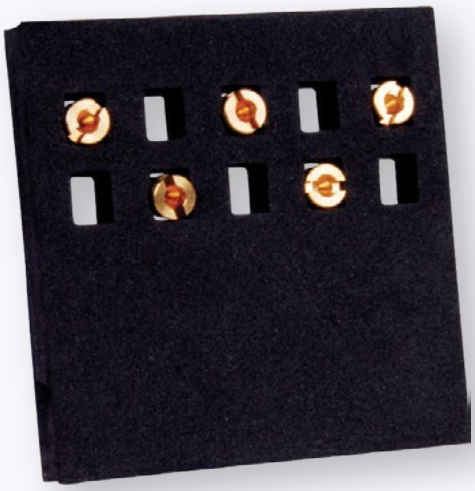

CODE	SIZE
02MJ2001	110 - 118
02MJ2002	120 - 128
02MJ2003	130 - 138
02MJ2004	140 - 148
02MJ2005	150 - 158
02MJ2006	160 - 168

MAIN JET 10 PIECE KIT

CODE	SIZE
02M01020	88 - 110
02M01040	98 - 126

MAIN JET PIECES

CODE	SIZE	CODE	SIZE	CODE	SIZE
02MJ1001	88	02MJ1016	118	02MJ1031	148
02MJ1002	90	02MJ1017	120	02MJ1032	150
02MJ1003	92	02MJ1018	122	02MJ1033	152
02MJ1004	94	02MJ1019	124	02MJ1034	154
02MJ1005	96	02MJ1020	126	02MJ1035	156
02MJ1006	98	02MJ1021	128	02MJ1036	158
02MJ1007	100	02MJ1022	130	02MJ1037	160
02MJ1008	102	02MJ1023	132		
02MJ1009	104	02MJ1024	134		
02MJ1010	106	02MJ1025	136		
02MJ1011	108	02MJ1026	138		
02MJ1012	110	02MJ1027	140		
02MJ1013	112	02MJ1028	142		
02MJ1014	114	02MJ1029	144		
02MJ1015	116	02MJ1030	146		

PILOT JET 5 PIECE KIT

CODE	SIZE
02PJ2001	30 - 38
02PJ2002	40 - 48

PILOT JET KIT

For LC135 standard carburetor only

CODE	SIZE
02P00650	15 - 25
02P00670	35 - 45

PILOT JET PIECES

CODE	SIZE
02PJ1001	26
02PJ1002	28
02PJ1003	30
02PJ1004	32
02PJ1005	34
02PJ1006	36
02PJ1007	38

CODE	SIZE
02PJ1008	40
02PJ1009	42
02PJ1013	44
02PJ1014	46
02PJ1010	48
02PJ1011	50
02PJ1012	52

CARBON REED PETAL VALVE

CODE	MODEL
02R00040	Y125Z / RXZ

QUICK DISCONNECT FUEL COUPLER

CODE	MODEL
02D00010	6MM
02D00020	8MM

NOZZLE JET HOLDER

CODE	MODEL
02M01690	UNIVERSAL

FUEL INJECTION INTAKE MANIFOLD

CODE	MODEL	SIZE
02I00020	FZ150I	19.5 - 32MM (SUPERHEAD USE)
02I00010	FZ150I (OLD)	32MM
02I00200	FZ150I (NEW)	32MM
02I00180	FZ150I (NEW)	34MM
02I00230	Y15ZR	32MM
02I00210	Y15ZR	28.5 - 32MM (SUPERHEAD USE)
02I00220	Y15ZR	32 - 34MM (SUPERHEAD USE)
02I00240	FZ150I (NEW)	30MM (SUPERHEAD USE)
02I00250	FZ150I (NEW)	34MM (SUPERHEAD USE)
02I00380	Y15ZR	31 - 36MM (SUPERHEAD USE)

CARBURETOR INTAKE MANIFOLD

CODE	MODEL	SIZE
02I00060	LC135	28MM
02I00070	LC135	30MM
02I00080	SRL	24MM
02I00090	SRL	28MM
02I00100	UNIVERSAL	24MM
02I00110	UNIVERSAL	28MM

CONNECTION TUBE

CODE	MODEL	SIZE
02C00120	FZ150I	32MM
02C00880	FZ150I	34MM
02C00930	Y15ZR	34MM

INTAKE ADAPTOR

CODE	SIZE
02I00030	24MM
02I00040	28MM
02I00050	30 - 32MM

CARBURETOR FLANGE

CODE	SIZE
02C00360	35 - 38MM
02C00370	38 - 40MM

COOLING SYSTEM

RADIATOR

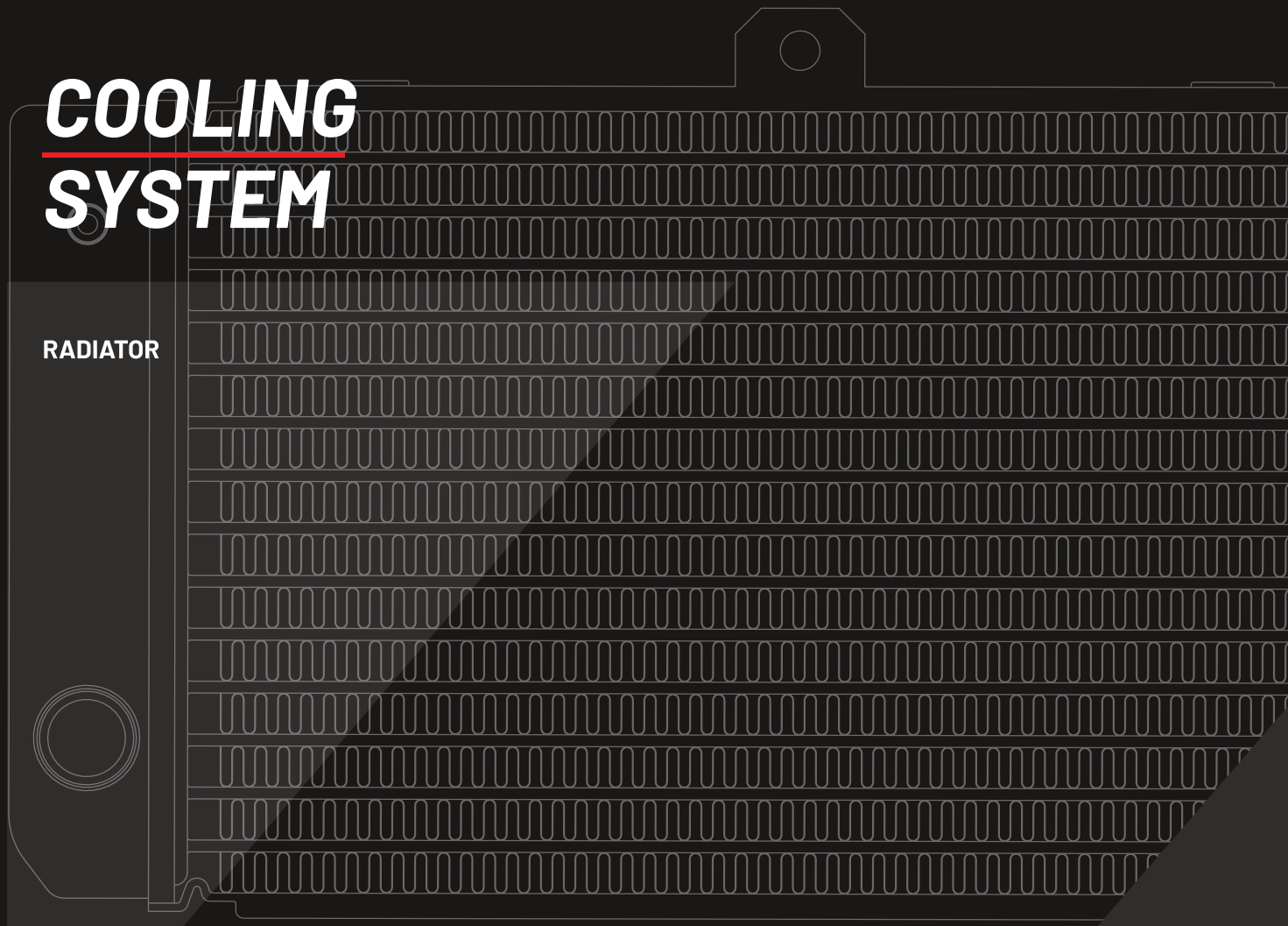

MOTORCYCLE PERFORMANCE PARTS
TECHNOLOGY BY UMA RACING

RADIATOR

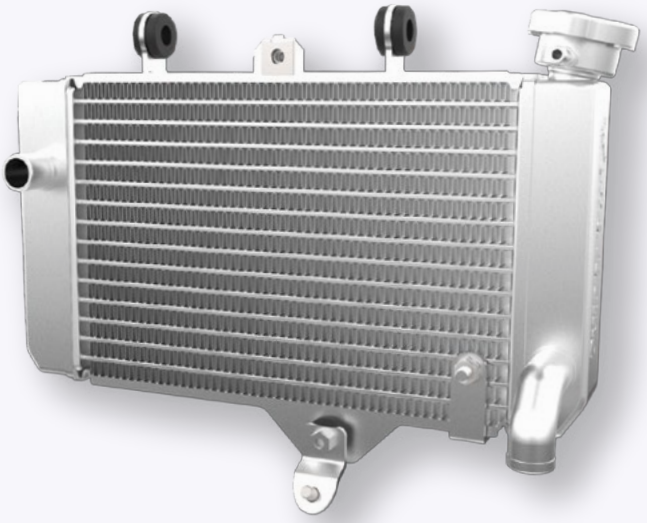

- Made from high grade aluminium
- Superior cooling capability
- Thicker & wider core
- Quick heat disbursement
- Applicable for big bore engine
- 30% Larger than standard radiator
- Increased capacity

Increased Cooling: **30%**
Water capacity : **350ml**
Size: **295 (L) X 154 (H) X 26 (W)**

CODE	MODEL
02R00060	RS150R

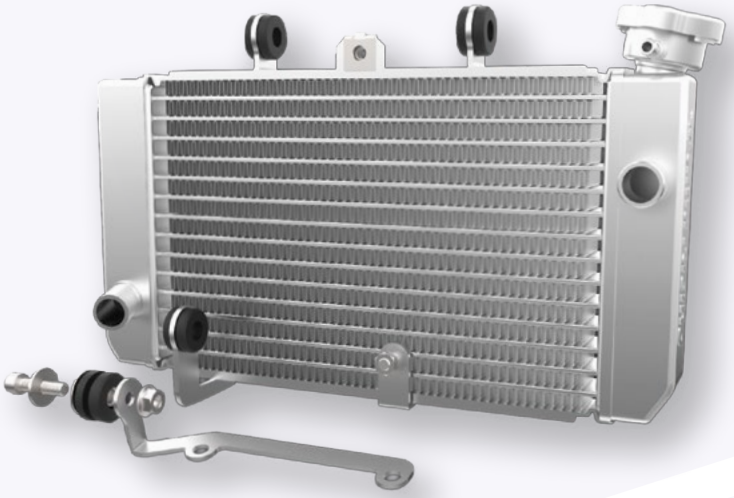

Increased Cooling: **40%**
Water capacity : **350ml**
Size: **305 (L) X 154 (H) X 26 (W)**

CODE	MODEL
02R00050	Y15ZR

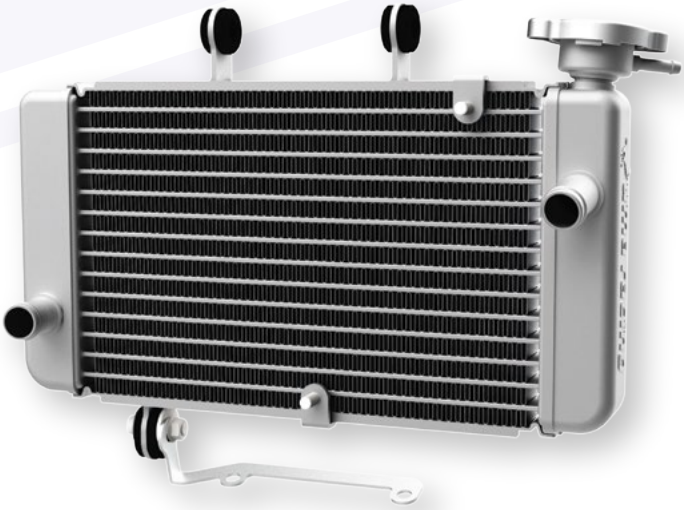

Increased Cooling: **40%**
Water capacity : **380ml**
Size: **305 (L) X 154 (H) X 26 (W)**

	CODE	MODEL
NEW	02R00070	LC135

TRANSMISSION

QUICKMISSION GEARBOX

CLUTCH

TIMING GEAR

PULLEY ASSEMBLY

AUTO SPRING

GEARBOX

QUICKMISSION GEARBOX

*Without drive axle

- Greater flow rate
- High volume pump
- Superior performance
- High pressure for essential engine needs

CODE	MODEL
02GB0100	LC135 / FZ150I / Y15ZR

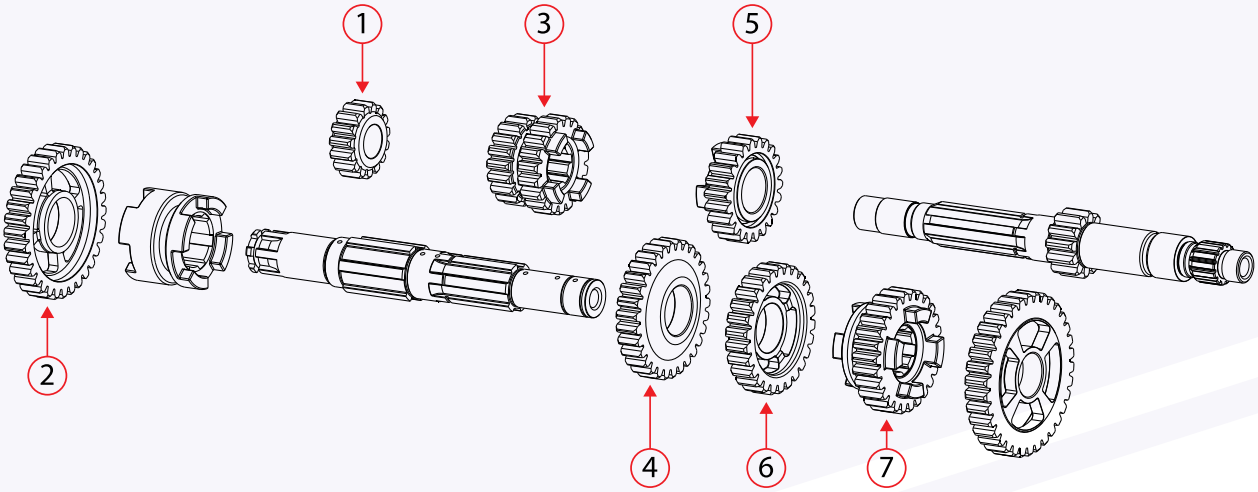

TRANSMISSION GEAR

S/NO	PART NUMBER	DESCRIPTION
1	UMA - 2P - 15T	GEAR - 2ND PINION - 15T
2	UMA - 2W - 32T	GEAR - 2ND WHEEL - 18T
3	UMA - 3P - 18T UMA - 4P - 19T	GEAR - 3RD PINION - 18T GEAR - 4TH PINION - 19T
4	UMA - 3W - 30T	GEAR - 3RD WHEEL - 30T
5	UMA - 4W - 26T	GEAR - 4TH WHEEL - 26T
6	UMA - 5P - 22T	GEAR - 5TH PINION - 22T
7	UMA - 4W - 26T	GEAR - 5TH PINION - 26T

GEARBOX

*Without drive axle

CODE	MODEL
02GB0010	SRL

TRANSMISSION GEAR

S/NO	PART NUMBER	DESCRIPTION
1	SRL - 17411 - 00	AXLE MAIN - 13T
2	SRL - 17131 - 00	GEAR - 3RD PINION - 18T
3	SRL - 17141 - 00	GEAR - 4TH PINION - 20T
4	*90201 - 20266	WASHER - PLATE - T = 1.0
5	*90341 - 20809	CIRCLIP
6	SRL - 17121 - 00	GEAR - 2ND PINION - 16T
7	*90210 - 15566	WASHER - PLATE - T = 0.8
8	*90210 - 12266	WASHER - PLATE - T = 0.7
9	SRL - 17402 - 00 SRL - 17221 - 00	DRIVE AXLE ASSEMBLY GEAR - 2ND WHEEL - 29T
10	*90210- 21266	WASHER - PLATE - T = 0.7
11	*93410 - 21809	CIRCLIP
12	SRL - 17241 - 00	GEAR - 4TH WHEEL - 24T
13	SRL - 17231 - 00	GEAR - 3RD WHEEL - 26T
14	SRL - 17211 - 00	GEAR - 1ST WHEEL - 33T
15	*90387 - 1503D	COLLAR
16	*90201 - 15266	WASHER - PLATE - T = 1.0
17	99009 - 15400	CIRCLIP

OPTIONAL GEAR

S/NO	PART NUMBER	DESCRIPTION
3	SRL - 17141 - 10	GEAR - 4TH PINION - 22T
6	SRL - 17121 - 10	GEAR - 2ND PINION - 18T
9	SRL - 17221 - 20 SRL - 17221 - 10	GEAR - 2ND WHEEL - 30T GEAR - 2ND WHEEL - 32T
12	SRL - 17241 - 10	GEAR - 4TH WHEEL - 26T

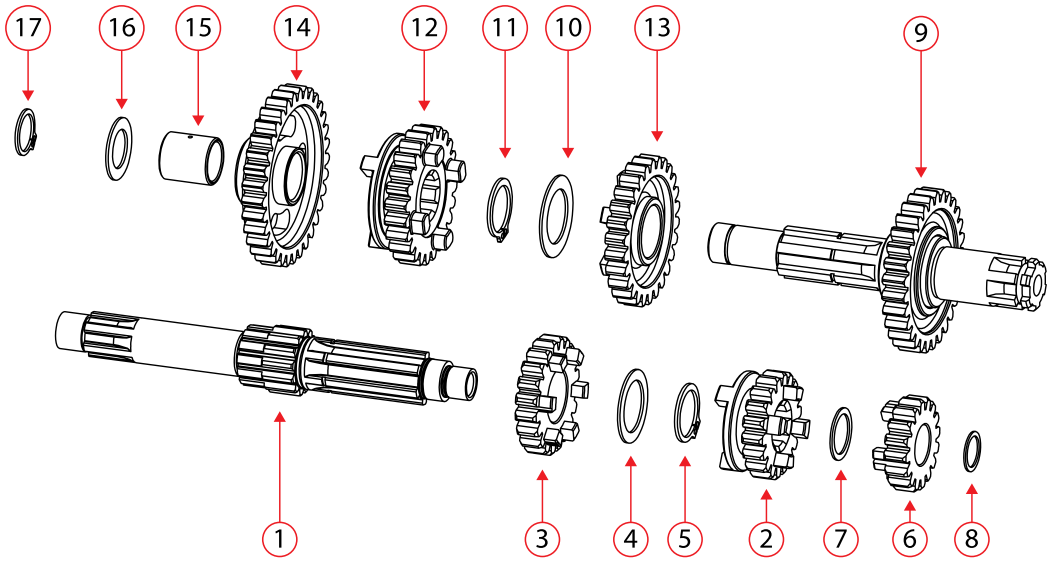

CLUTCH

SLIPPER CLUTCH

- Reduce transmission wear & tear
- Decrease & absorb engine braking force
- Prevent rear wheel lock
- Race proven

	CODE	MODEL
	02C00890	Y15ZR / Y16ZR
NEW	02C01030	RS150 / SONIC

HYPER CLUTCH

- Minimal chain noise
- Smooth operation
- Supreme durablility

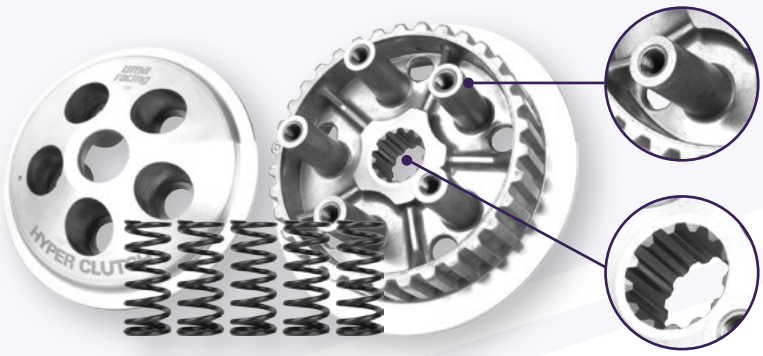

5-Springs for better gear engagement compared to standard 4-spring setup

Steel insert spline made from stainless steel to reduce wear & tear

HYPER CLUTCH

CODE	MODEL
02C00810	Y15ZR / Y16ZR / R15 V3
02C00920	R25
02C00980	RS150R

4 GEAR CLUTCH (DUAL)

CODE	MODEL
02C00480	LC4S (AUTO)
02C00490	SRL110 / Y110
02C00700	W100 / EX5
02C00750	SRL115I
02C00950	SRL110 (RACE)

SRL110 (RACE)

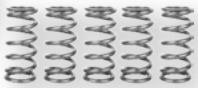

4 GEAR CLUTCH

CODE	MODEL
02C00040	LC4S / LC5S

5 GEAR CLUTCH

CODE	SIZE
02C00070	LC5S / FZ150I / R15 V1 & V2

6 GEAR CLUTCH

CODE	MODEL
02C00710	Y125Z

CLUTCH SPRING

CODE	MODEL
02C00430	EX5 / EX5 DREAM / W100 / W125
02C00440	LC6S / LC4S / LC5S / FZ150I
02C00450	RXZ
02C00460	SRL
02C00760	LC135 (AUTO)
02C00790	SRL (OLD AUTO)
02C00820	R25
02C00860	Y16ZR / Y15ZR / Y125Z
02C00870	KR150RR
02C00990	RS150R

CLUTCH PLATE

CODE	MODEL
02C00960	SRL (RACE USE)

CLUTCH PLATE

- Increase clutch shifting smoothness
- Maximum performance & precise power transmission
- Highly durable steel

CODE	MODEL	PIECES
02CD0010	LC5S	5
02CD0020	EX5	4
02CD0030	WAVE125	4
02CD0040	LC135	4
02CD0050	Y125Z	5
02CD0060	R25 / KR150	6
02CD0070	Y16ZR / Y15ZR	4
02CD0080	R15	3
02CD0110	Y110 / SRL	5
02CD0120	KRISS	5
02CD0140	RS150R	5
02C00620	RXZ	6
02C00640	Y110	5
02C00910	R15 (CARBONV3)	6

CLUTCH PUSH ROD

- High grade steel for maximum strength
- Tuned for consistent performance
- Highly durable & resistant to bending

CODE	MODEL
02C01010	Y15ZR

PULLEY ASSEMBLY

CVT PULLEY KIT

- CNC Machined
- Reduce Noise And Vibration
- Better heat dissipation
- Better Acceleration And Maximum Performance
- Improved Heat Dissipation
- High quality
- Highly Durable
- Low noise

	CODE	MODEL	ROLLER SIZE
	02P00870	NMAX / NVX	20 X 12 (11G)
	02P00890	VARIO 125 / 150	20 X 15 (13.5G)
NEW	02P00920	NMAX / NVX (NEW)	20 X 12 (13G)
	02P00930	BEAT110	18 X 14 (13G)

RACING PULLEY ASSEMBLY

CODE	MODEL	ROLLER SIZE
02P00200	MOSKITO	18 X 14 (12G)

CODE	MODEL	ROLLER SIZE
02P00060	EGO	18 X 14 (10G)
02P00210	EGO / EGO S NOUVO / NOUVO S	16 X 13 (9G)

CODE	MODEL	ROLLER SIZE
02P00220	NOUVO LC	20 X 12 (11G)

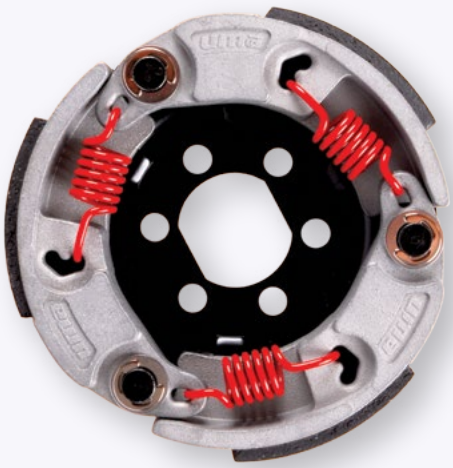

AUTO SPORT CLUTCH SHOE

CODE	MODEL
02C00110	EGO / EGO S / NOUVO / NOUVO S

AUTO CLUTCH HOUSING

CODE	MODEL
02C00140	EGO

FORGED DRIVE FACE

CODE	MODEL
02D00200	ELEGAN

PULLEY ROLLER

SIZE: 15 x 12

CODE	MODEL	WEIGHT
02P00690	EGO / EGO S / NOUVO / NOUVO S	9G
02P00240	EGO / EGO S / NOUVO / NOUVO S	10G
02P00250	EGO / EGO S / NOUVO / NOUVO S	11G
02P00260	EGO / EGO S / NOUVO / NOUVO S	12G

SIZE: 17 x 12

CODE	MODEL	WEIGHT
02P00330	VS	10G
02P00340	VS	11G
02P00350	VS	12G

SIZE: 18 x 14

CODE	MODEL	WEIGHT
02P00360	MOSKITO / EGO / CLICK	7.5G
02P00370	MOSKITO / EGO / CLICK	8G
02P00380	MOSKITO / EGO / CLICK	10G
02P00390	MOSKITO / EGO / CLICK	11G

SIZE: 20 x 12

CODE	MODEL	WEIGHT
02PR0506	NMAX / NVX	6G
02PR0507	NMAX / NVX	7G
02PR0508	NMAX / NVX	8G
02PR0509	NMAX / NVX	9G
02PR0510	NMAX / NVX	10G
02PR0511	NMAX / NVX	11G
02PR0512	NMAX / NVX	12G

SIZE: 16 x 13

CODE	MODEL	WEIGHT
02P00300	EGO / EGO S / NOUVO / NOUVO S	7.5G
02P00310	EGO / EGO S / NOUVO / NOUVO S	8G
02P00710	EGO / EGO S / NOUVO / NOUVO S	9G
02P00270	EGO / EGO S / NOUVO / NOUVO S	10G
02P00280	EGO / EGO S / NOUVO / NOUVO S	11G
02P00290	EGO / EGO S / NOUVO / NOUVO S	12G
02P00720	EGO / EGO S / NOUVO / NOUVO S	13G

SIZE: 20 x 12

CODE	MODEL	WEIGHT
02P00430	NOUVO LC	8
02P00440	NOUVO LC	9
02P00400	NOUVO LC	10
02P00410	NOUVO LC	11
02P00420	NOUVO LC	12

SIZE: 20 x 15

CODE	MODEL	WEIGHT
02P00450	ELEGAN	11.5G
02P00460	ELEGAN	12.5G
02P00470	ELEGAN	13G
02P00480	ELEGAN	13.5G
02P00490	ELEGAN	14.5G
02B00500	ELEGAN	15.5G

AUTO SPRING

TORQUE SPRING

- Quick response in acceleration
- Maximise power transmission
- Super stiff & highly durable
- Reduce belt slippage

1000RPM 1500RPM

CODE	MODEL	RPM
02T00670	NMAX / NVX	1000
02T00680	NMAX / NVX	1500

1000RPM 1500RPM 2000RPM

CODE	MODEL	RPM
02T00160	NOUVO LC	1000
02T00100	NOUVO LC	1500
02T00140	NOUVO LC	2000
02T00150	ICON	1000
02T00120	ICON	2000

CODE	MODEL	RPM
02T00070	EGO	1500
02T00110	EGO	2000
02T00090	NOUVO	1500
02T00130	NOUVO	2000

EXHAUST

TRU PRESSURE EXHAUST

BACK PRESSURE EXHAUST

EXHAUST

TRU PRESSURE EXHAUST

- Enhanced Sound
- Plug & play
- Withstand up to 200cc
- Improved horsepower & torque

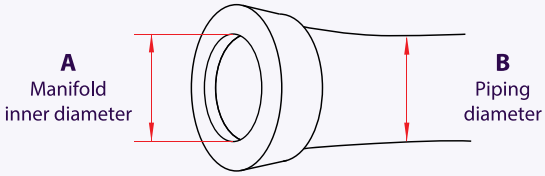

CODE	MODEL	A	B
02E00120	Y15ZR	28MM±	32MM
02E00130	RS150R	32.5MM±	35MM
02E00140	VF3I	29MM±	31.8MM

BACK PRESSURE EXHAUST

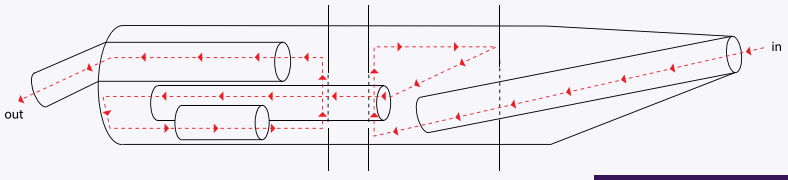

- Improve horsepower & torque
- Withstand up to 200cc
- Low Noise
- Plug & play

CODE	MODEL	A	B
02E00010	Y15ZR	28MM±	32MM
02E00030	LC5S	28MM±	32MM
02E00040	RS150R	28MM±	32MM
02E00050	FZ150I	28MM±	32MM
02E00060	BELANG	28MM±	32MM
02E00110	LC4S (NEW)	28MM±	32MM

MOTORCYCLE PERFORMANCE PARTS
TECHNOLOGY BY UMA RACING

ELECTRONICS SYSTEM

M5 ECU

AIR / FUEL RATIO

UTECH IRIDIUM SPARK

QUICK SHIFTER

MAGNETO

IMC DIGITAL CDI

OTHERS

SPEEDOMETER

ECU & MODULE

M5 ECU

- Minimal tools for installation
- Unlock RPM, No limiter
- Autotune features
- Plug & play
- Back fire adjustments
- Fuel compensation for engine temperature
- Easy tuning through smartphone or laptop
- B-Link smart tuning & monitoring

CODE	MODEL
02AR0065	Y15ZR / FZ150I / R15 V2
02AR0085	Y15ZR V2
02AR0087	RFS150I
02AR0120	MT15 V2 / Y16ZR
02AR0121	R25 / MT25 (>2019)

AFR WIDEBAND MODULE

- High accuracy & response
- Wideband O2 sensor included
- Auto tuning for M5 ECU
- Water resistant
- Plug & play

CODE	MODEL
02AR0072	UNIVERSAL

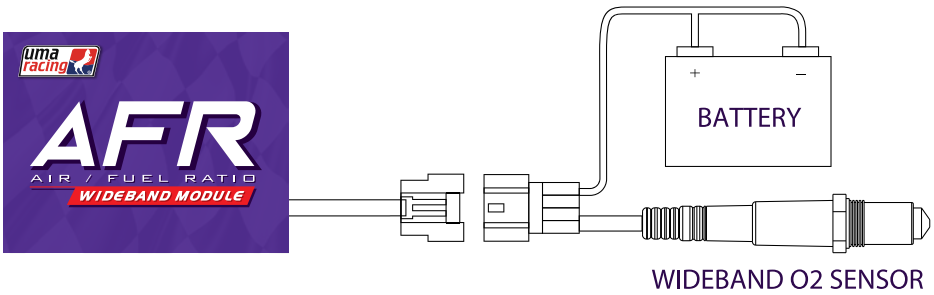

DIGITAL CDI

IMC DIGITAL CDI

- Increase power
- Enhance engine responsiveness
- Programmable mapping

1 MAP (WITHOUT CONTROLLER)

CODE	MODEL
02M01570	LC135
02M01580	EX5
02M01610	BELANG 6 WIRE (OLD)
02M01620	BELANG 5 WIRE (NEW)

4 MAP (WITH CONTROLLER)

CODE	MODEL
02M01110	SRL110 / SRL115 / EGO / NOUVO115
02M01120	LC135 / LCES / LC4S / LC5S
02M01420	W110
02M01430	W125

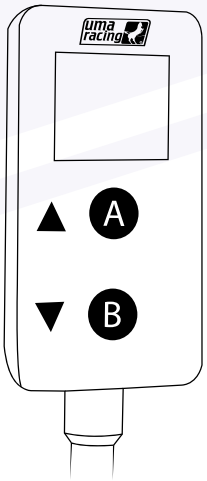

CONTROLLER SETTING	4 MAP IMC DIGITAL CDI FUNCTION
PRESS UP OR DOWN BUTTON A OR B	4 PRESET MAPS
PRESS UP & DOWN BUTTON SIMULTANEOUSLY FOR 3 SECONDS A+B	DEGREE MANIPULATION -9 TO +9

QUICK SHIFTER

QUICKSHIFTER CDI

- Reduce wear & tear of clutch & transmission
- Suitable for use with CDI
- Clutchless shifting
- Plug & play

Tension

Compression

CODE	MODEL	TYPE
02AR0062	UNIVERSAL	TENSION
02AR0063	UNIVERSAL	COMPRESSION

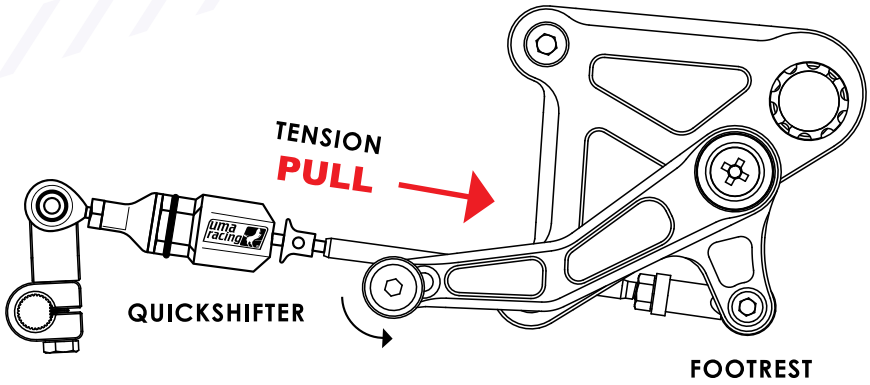

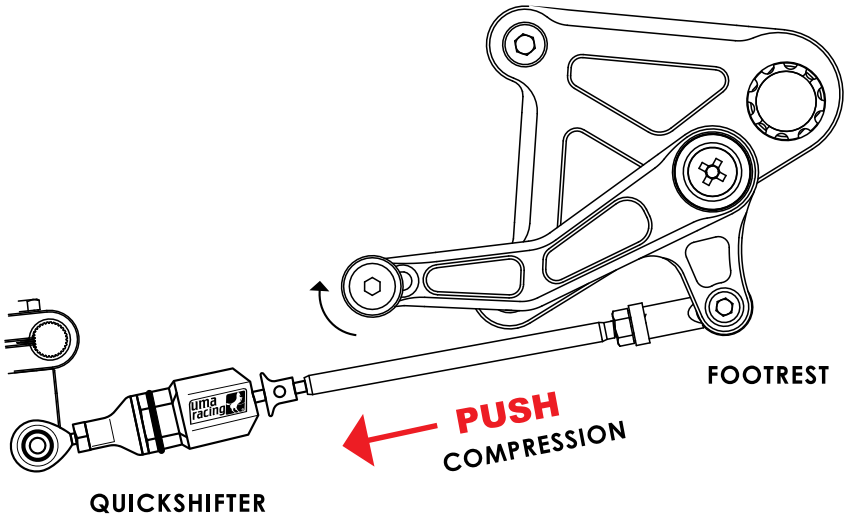

MAGNETO SUPER LIGHT IGNITION ROTOR

- Improve throttle response
- Improve acceleration
- Super lightweight
- Race proven

CODE	MODEL	WEIGHT
02I00270	Y15ZR / Y16ZR	1.22KG
02I00360	LC135 4S	0.967KG
02I00370	LC135 5S	0.974KG

SPARK PLUG

UTECH IRIDIUM SPARK

- High performance spark plug
- Promotes better combustion
- Improves throttle response
- Longer plug service life

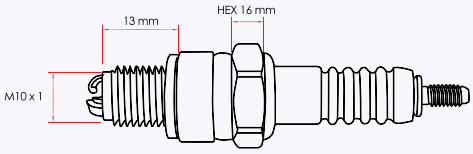

CODE	MODEL	TYPE
02AR0114	UNIVERSAL	AC7R31

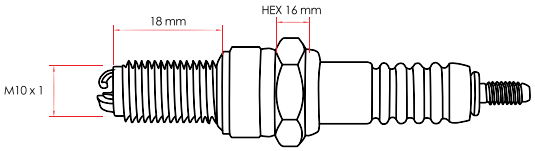

CODE	MODEL	TYPE
02AR0067	UNIVERSAL	AB8R31
02AR0068	UNIVERSAL	AB9R31

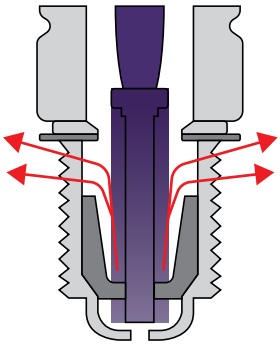

AB8R31
- Suitable for daily use engine
- High durability

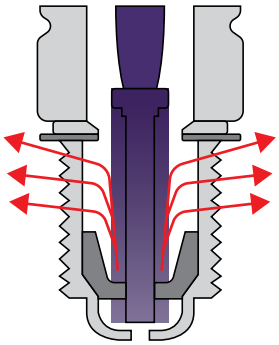

AB9R31
- Suitable for high performance engine
- Withstands higher temperature

PLUG COIL

PLUG COIL

- Improves engine response
- Accurate & consistent performance
- Greater & more stable energy output
- Plug & play

Carburetor Type (Race Use)

CODE	MODEL
02PC001P	UNIVERSAL

Fuel Injection Type

CODE	MODEL
02PC002R	UNIVERSAL

OTHERS

CDI CONTROLLER

CODE
02M01400

CDI ADVANCED CONTROLLER

CODE
02M01350

FUEL INJECTION CONTROLLER

CODE	MODEL
02F00130	W110

G1 SIGNAL CONTROLLER

CODE	MODEL
02S00180	YAMAHA

START STOP SWITCH

CODE	MODEL
02S00100	UNIVERSAL

ENGINE STOP SWITCH

CODE	MODEL
02S00110	UNIVERSAL

OTHER PARTS & ACCESSORIES

QUICK THROTTLE

BYPASS

VENTHOSE

QUICK THROTTLE

QUICK THROTTLE

- Increase responsiveness
- Shorter stroke
- Larger pulley

SET

CODE	MODEL
02Q00010	LC135
02Q00020	SCOOTER
02Q00030	EX5 / LC / SRL

PIPE WITHOUT CABLE

CODE	MODEL
02Q00060	UNIVERSAL

CABLE ONLY

CODE	MODEL
02Q00040	LC135
02Q00050	SCOOTER

PIPE WITHOUT CABLE

CODE	MODEL	COLOUR
02Q00090	Y15ZR / YAMAHA	BLACK
02Q00100	Y15ZR / YAMAHA	CHROME

BYPASS

BYPASS GRENADE

45°

CODE	MODEL	COLOUR
02B0042A	YAMAHA / HONDA	BLUE
02B0042B	YAMAHA / HONDA	BLACK
02B0042G	YAMAHA / HONDA	GOLD
02B0042R	YAMAHA / HONDA	RED

90°

CODE	MODEL	COLOUR
02B0043A	YAMAHA / HONDA	BLUE
02B0043B	YAMAHA / HONDA	BLACK
02B0043G	YAMAHA / HONDA	GOLD
02B0043R	YAMAHA / HONDA	RED
02B0044A	SUZUKI	BLUE
02B0044B	SUZUKI	BLACK
02B0044G	SUZUKI	GOLD
02B0044R	SUZUKI	RED
02B0021A	KAWASAKI / MODENAS	BLUE
02B0021B	KAWASAKI / MODENAS	BLACK
02B0021G	KAWASAKI / MODENAS	GOLD
02B0021R	KAWASAKI / MODENAS	RED

BYPASS VENT HOSE

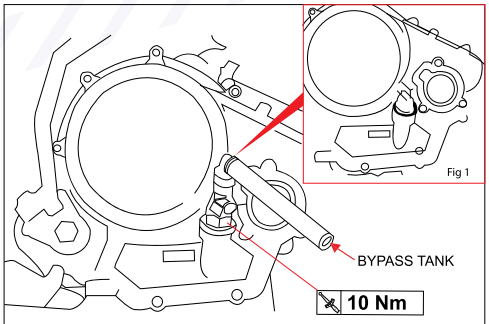

STEP-BY-STEP INSTRUCTIONS :

Step 1 : Push button 'A' to release the base

Step 2 : Remove original oil level from bike (Fig 1)

Step 3 : Install new bypass

Step 4 : Connect vent hose to bypass

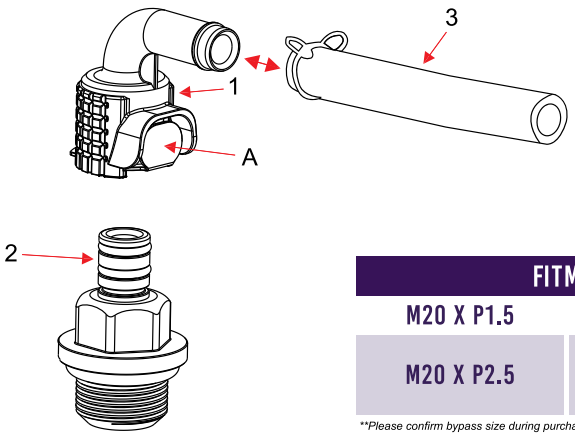

FITMENT	
M20 X P1.5	SUZUKI MODELS
M20 X P2.5	YAMAHA / HONDA KAWASAKI / MODENAS

***Please confirm bypass size during purchase.*

CODE	MODEL	COLOUR
02B00290	UNIVERSAL	NEON BLUE
02B00300	UNIVERSAL	NEON GREEN
02B00310	UNIVERSAL	NEON ORANGE
02B00320	UNIVERSAL	NEON PURPLE
02B00330	UNIVERSAL	NEON YELLOW

SPEEDOMETER

UTECH SPEEDOMETER

CODE	MODEL
02M01600	Y15ZR

- Speedometer
- Shift light
- Temperature °C / °F
- Clock
- Air / Fuel ratio
- Odometer
- Throttle Position Sensor (TPS)
- Volt Indicator
- Black Light
- Trip meter
- Water temperature
- Fuel gauge
- Oil Temperature
- Speed Warning light
- Gear indicator
- Target distance timer
- Tachometer
- Temperature Alarm
- Hour meter

DIGITAL SP METER 8 COLOUR LIGHT

CODE	MODEL
02M00140	LC5S

- Speedometer
- Shift light
- Volt indicator
- Odometer
- Air / Fuel ratio
- Fuel gauge
- Trip meter
- Water thermometer
- Clock
- JIS D 0203
- Backlight

SP METER 8 COLOUR LIGHT

CODE	MODEL
02M00160	LC135

Speedometer | Shift light | Volt indicator | Odometer | Air / Fuel ratio | JIS D 0203

Fuel gauge | Trip meter | Water thermometer | Clock | Tachometer | Backlight

DIGITAL LCD BLUE BACK LIGHT

CODE	MODEL
02M00150	EX5

Speedometer | Shift light | Volt indicator | Odometer | Air / Fuel ratio | JIS D 0203

Fuel gauge | Trip meter | Water thermometer | Clock | Tachometer | Backlight

uma racing®

MOTORCYCLE MANUFACTURERS

BIKE MODEL | BY COUNTRY

YAMAHA					
MALAYSIA	THAILAND	PHILIPPINES	VIETNAM	BERMUDA	INDONESIA
Y16ZR	EXCITER 155	SNIPER 155	EXCITER 155	N / A	MX KING 155
EGO	MIO	MIO SPORTY	SPORTY	SPORTY	EGO
EGO S	MIO MX	MIO ULTIMD	MIO SOUL	MIO SOUL	EGO S
EGO LC125	N / A	N / A	N / A	N / A	XEON RC125
FZ 150i	FZ 150	FZ 150	VIXION	VIXION	VIXION
LC135	SPARK 135	EXCITER 2010	SPARK	SPARK	MX-135
LCES	SPARK 135	EXCITER GP 2011	SPARK	SPARK	MX-135 AUTO
LC4S	SPARK 135 4S	EXCITER 2011	SPARK	SPARK	MX-135 CLUTCH
LC5S	SPARK 135 5S	EXCITER RC 2011	SPARK	SPARK	MX 5 SPEED
NMAX	NMAX	NM-X	N / A	N / A	NMAX
NOUVO	NOUVO	NOUVO	NOUVO Z 115	NOUVO Z 115	NOUVO Z
NOUVO S	NOUVO MX	NOUVO RC	NOUVO Z 115	NOUVO Z 115	NOUVO S
NOUVO LC	NOUVO 135	NOUVO RC GP	ELEGANCE	ELEGANCE	N / A
NVX	AEROX 155	NVX 155	N / A	N / A	AEROX 155 VVA
RXZ	RXZ	N / A	RXZ135	RXZ135	N / A
SRL 110	SPARK 110	JUPITER	SPARK / NAND	SPARK / NAND	JUPITER Z
SRL 115	N / A	JUPITER R	SPARK / NAND	SPARK / NAND	JUPITER Z
SRLZ	N / A	JUPITER RC	SPARK / NAND	SPARK / NAND	JUPITER Z1
Y125Z	JR	Y125Z	N / A	N / A	N / A
Y15ZR	EXCITER 150	SNIPER 150	EXCITER 150	N / A	MX KING 150
X-MAX	X-MAX	N / A	X-MAX	X-MAX	X-MAX
R15	R15	R15	R15	R15	R15
R25	R25	R25	R25	R25	R25
MT-15	MT-15	N / A	MT-15	N / A	MT-15
MT-25	MT-25	N / A	MT-25	N / A	MT-25

HONDA					
MALAYSIA	THAILAND	PHILIPPINES	VIETNAM	BERMUDA	INDONESIA
VARIO 155	CLICK	VARIO	VARIO	CLICK	VARIO 155
EX5	DEAM KURUSAPA	DREAM	DREAM	N / A	N / A
EX5 DREAM	DREAM	DREAM	DREAM	CUBSMASH	N / A
EX5 110	DREAM 110i	SUPER DREAM	SUPER DREAM	N / A	N / A
BEAT	ICON	N / A	N / A	ICON	BEAT
RS150R	RS150R	N / A	N / A	N / A	SUPRA GTR
WAVE 100	WAVE 100	WAVE ALPHA	WAVE ALPHA	WAVE 110	SUPRA FIT
WAVE 110	WAVE 150 200T	WAVE S 110	WAVE S 110	WAVE 125i	RENO ABSOLUTE
WAVE 110 DX	WAVE 110	WAVE X	WAVE X	N / A	N / A
WAVE 125	WAVE 125	N / A	N / A	WAVE 125	WAVE 125
PCX	PCX	N / A	PCX	N / A	PCX
ADV 150	ADV 150	ADV 150	N / A	ADV 150	ADV 150

SUZUKI					
MALAYSIA	THAILAND	PHILIPPINES	VIETNAM	BERMUDA	INDONESIA
BELANG	RAIDER 150	RAIDER 150	RAIDER F 150	RAIDER	FU 150
RGS	AKIRA	N / A	RG SPORT	SMASH	N / A
SHOGUN 110	BEST 110	SHOGUN 110	SHOGUN	N / A	SHOGUN 110
SMASH PRO	SMASH PRO	SMASH 110	SMASH	SMASH	SMASH 110
VS	N / A	N / A	N / A	N / A	N / A
N / A	RAIDER R150	RAIDER R150	RAIDER R150	N / A	SATRIA F150

Kawasaki					
MALAYSIA	THAILAND	PHILIPPINES	VIETNAM	BERMUDA	INDONESIA
NINJA KRR150	NINJA KRR150	NINJA KRR150	NINJA KRR150	NINJA KRR150	NINJA KRR150
NINJA 250	NINJA 250	NINJA 250	NINJA 250	NINJA 250	NINJA 250
KLX 150	KLX 150	KLX 150	KLX 150	KLX 150	KLX150
KSR	KSR	KSR	KSR	KSR	KSR

MODENAS					
MALAYSIA	THAILAND	PHILIPPINES	VIETNAM	BERMUDA	INDONESIA
KRISS	SHEAR 110	N / A	N / A	N / A	N / A

Benelli					
MALAYSIA	THAILAND	PHILIPPINES	VIETNAM	BERMUDA	INDONESIA
RFS150i	N / A	RFS150i	N / A	N / A	N / A

SYM					
MALAYSIA	THAILAND	PHILIPPINES	VIETNAM	BERMUDA	INDONESIA
VF3i 185	N / A	N / A	STAR SR 170i	N / A	N / A

MOTORCYCLE PERFORMANCE PARTS
TECHNOLOGY BY UMA RACING

REVEAL TRUE PERFORMANCE.

UMA RACING SDN BHD (591428-P)

NO. 40, JALAN TPP5, TAMAN PERINDUSTRIAN PUTRA,
47130 PUCHONG,SELANGOR DARUL EHSAN, MALAYSIA.

HOTLINE: +603 5033 5833 FAX: +603 2773 9011

www.umaracing.com